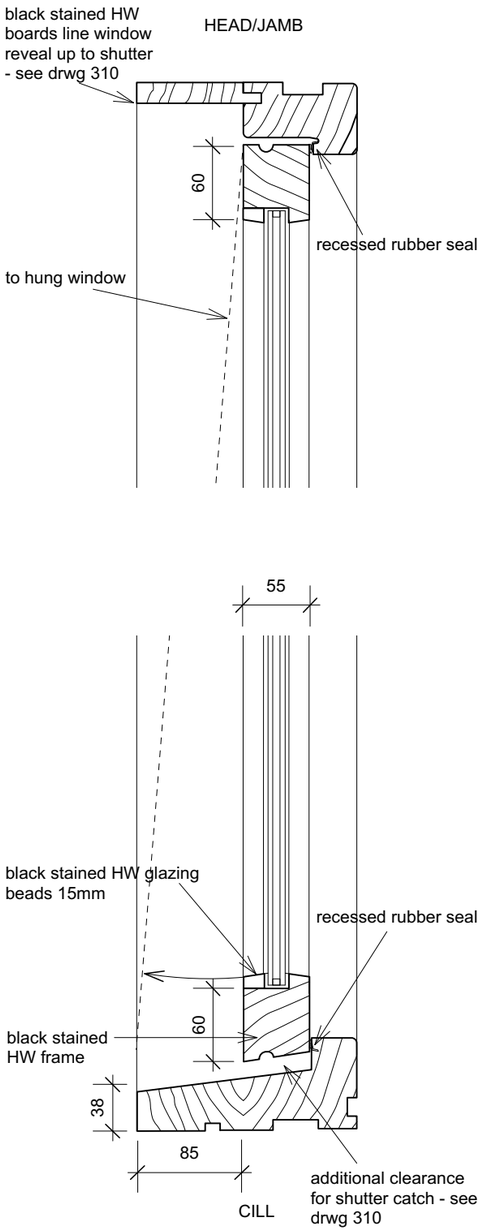

Detail D1 Hardwood Casement Window

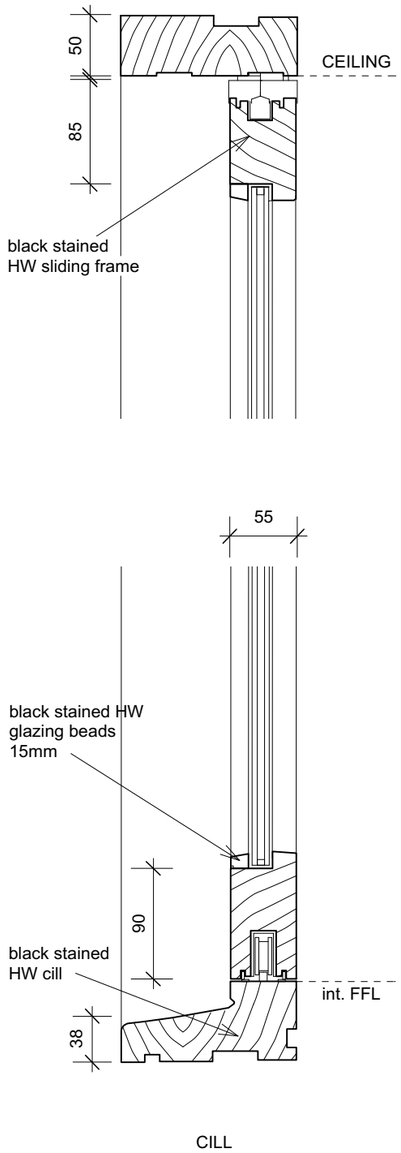

Detail D2 Sliding Doors

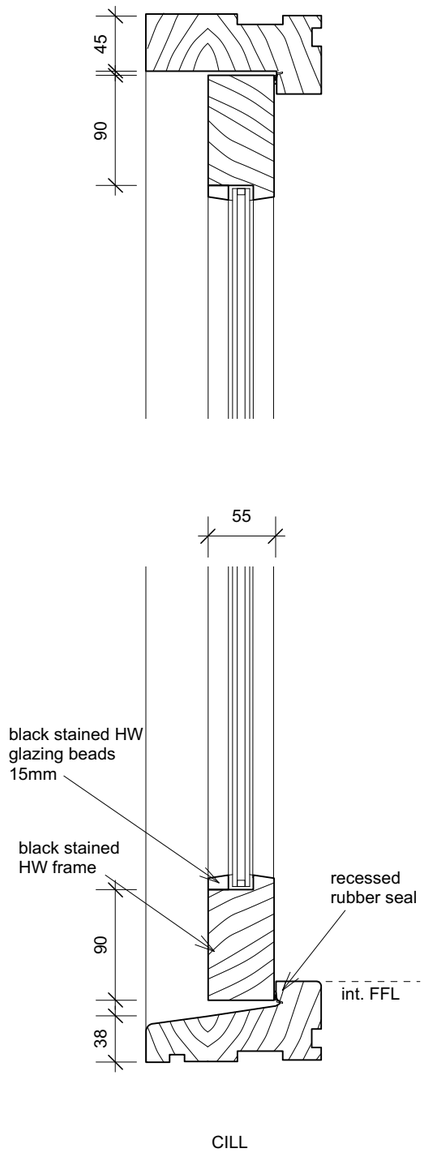

Detail D3 Patio Doors

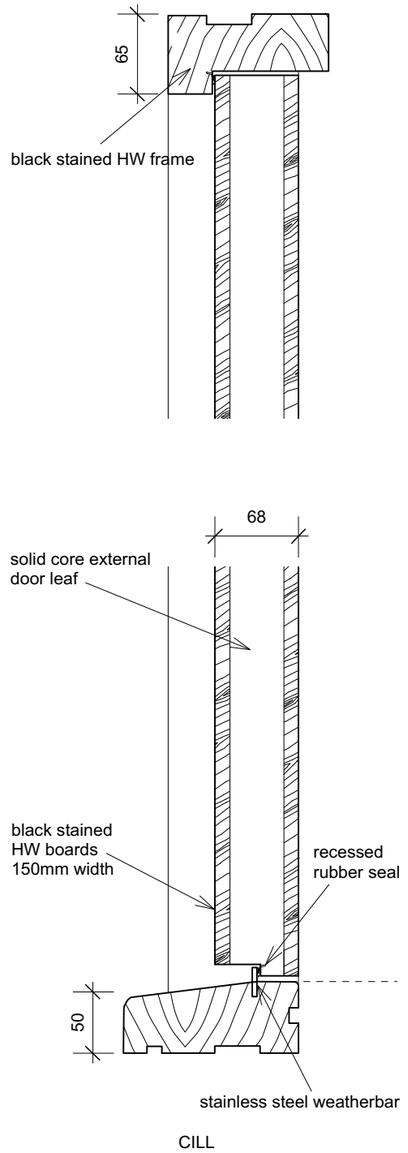

Detail D4 External Entrance Doors

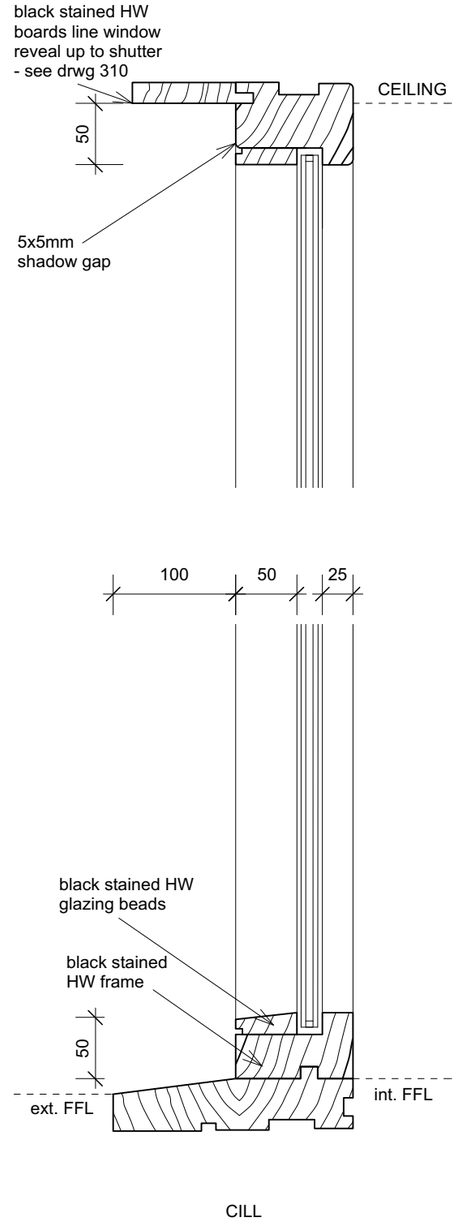

Detail D5 Fixed Windows

THATCH COTTAGE: DOORS AND WINDOW DETAILS 1:5 @ A3

status	**FOR PLANNING**
revisions	

ARCHITECTS
25 Links Yard. Spelman St. London E1 5LX
tel 020 7539 3686
fax 020 7539 3687
mail@featherstoneyoung.com
www.featherstoneyoung.com
FeatherstoneYoung

job	**Thatch Cottage, Clymping Mill**
address	**Climping**
dwg title	**Window Details**
scale **1:5/A3**	date **05/19**
CLI job reference	**09_006** drawing number / **-** revision

ARUN DISTRICT COUNCIL CM/42/19/HH