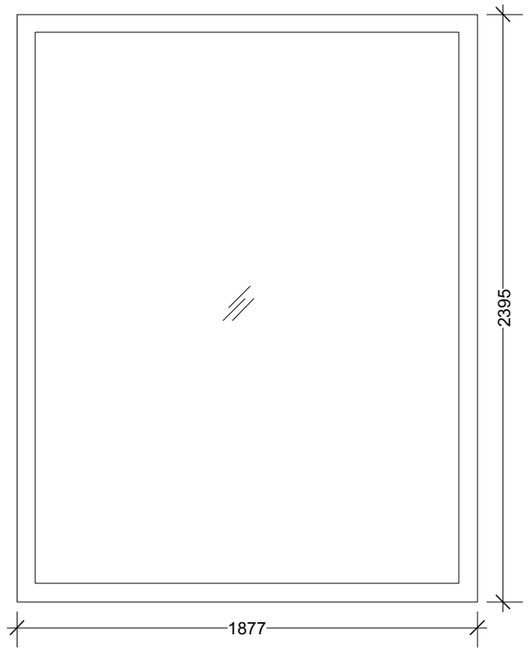

WG.01
FINISH: Hardwood Window, Fixed
GLAZING: Black stained HW
24mm DGUs, Argon filled

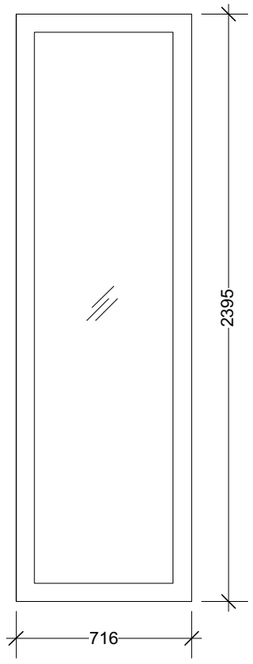

WG.02n
FINISH: Hardwood Window, Fixed
GLAZING: Black stained HW
24mm DGUs, Argon filled

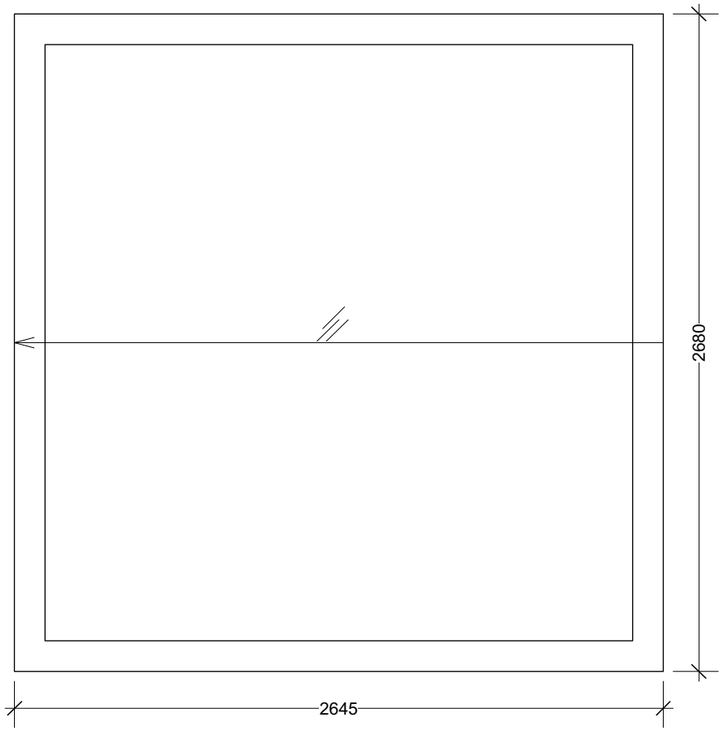

WG.03n & WG.04n
FINISH: Hardwood Sliding Door
GLAZING: Black stained HW
IRONMONGERY: 24mm DGUs, Argon filled
Bronze external hinges or sliding stays, handle, Mortice latchlock, Mortice deadlock with thumbturn

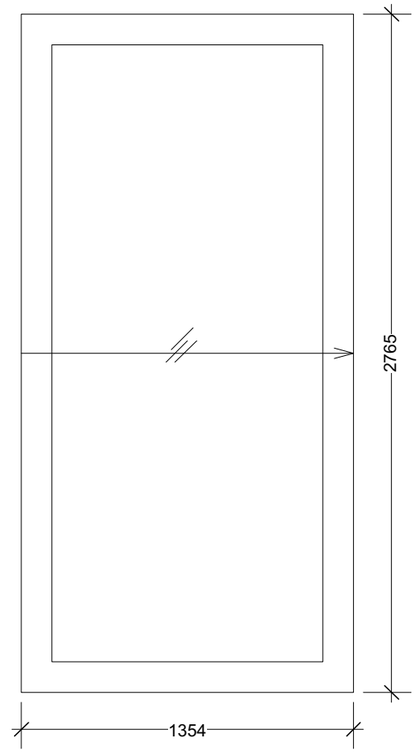

WG.05n
FINISH: Hardwood Sliding Door
GLAZING: Black Stained HW
IRONMONGERY: 24mm DGUs, Argon filled
Bronze external hinges or sliding stays, handle, Mortice latchlock, Mortice deadlock with thumbturn
Recessed flushbolt top+bottom to slave leaf

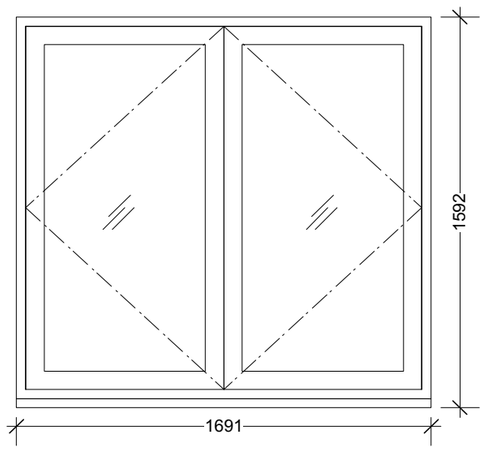

WG.08
FINISH: Hardwood Side hung Windows
GLAZING: Black stained HW
IRONMONGERY: 24mm DGUs, Argon filled
All bronze: external hinges or sliding stays, handle, recessed window lock, opening stay

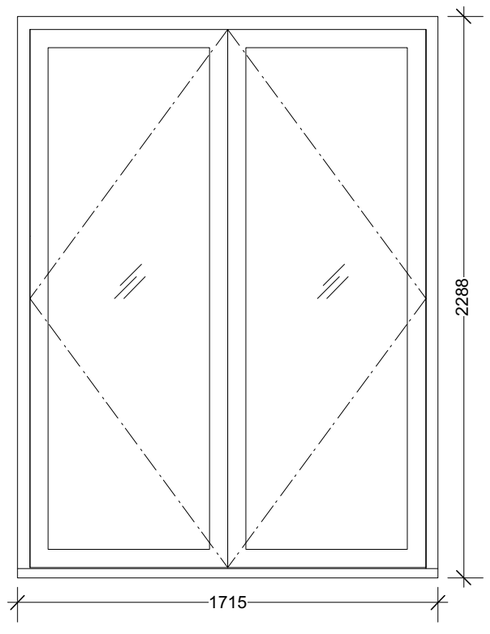

WG.07
FINISH: Hardwood Patio Door
GLAZING: Black stained HW
IRONMONGERY: 24mm DGUs, Argon filled
Bronze external hinges, bronze lever handle, Mortice latchlock, Mortice deadlock with thumbturn, Recessed flushbolt top+bottom to slave leaf

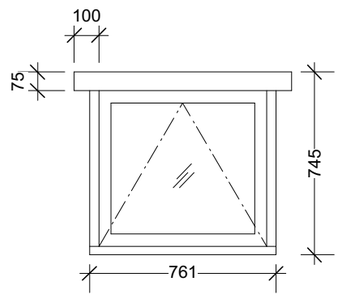

WG.06
FINISH: Hardwood Top hung Window
GLAZING: Black stained HW
IRONMONGERY: 24mm DGUs, Argon filled
All bronze: external hinges or sliding stays, handle, recessed window lock, opening stay

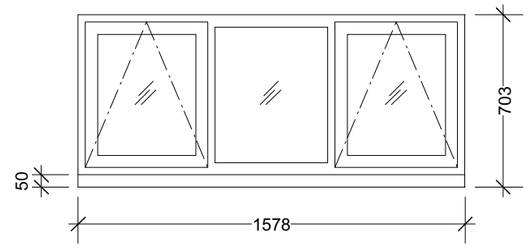

WG.10
FINISH: Hardwood Top hung and fixed Windows
GLAZING: Black stained HW
IRONMONGERY: 24mm DGUs, Argon filled
All bronze: external hinges or sliding stays, handle, recessed window lock, opening stay

MILL COTTAGE: DOORS AND WINDOWS 1:25 @ A3

ARUN DISTRICT COUNCIL CM/42/19/HH

status **FOR PLANNING**

revisions

ARCHITECTS
25 Links Yard. Spelman St. London E1 5LX
tel 020 7539 3686
fax 020 7539 3687
mail@featherstoneyoung.com
www.featherstoneyoung.com
FeatherstoneYoung

job **Thatch Cottage, Clymping Mill**
address **Climping**
dwg title **Window & Door Schedule**
scale **1:25/A3** date **05/19**

CLI job reference | **09 004** drawing number | **-** revision