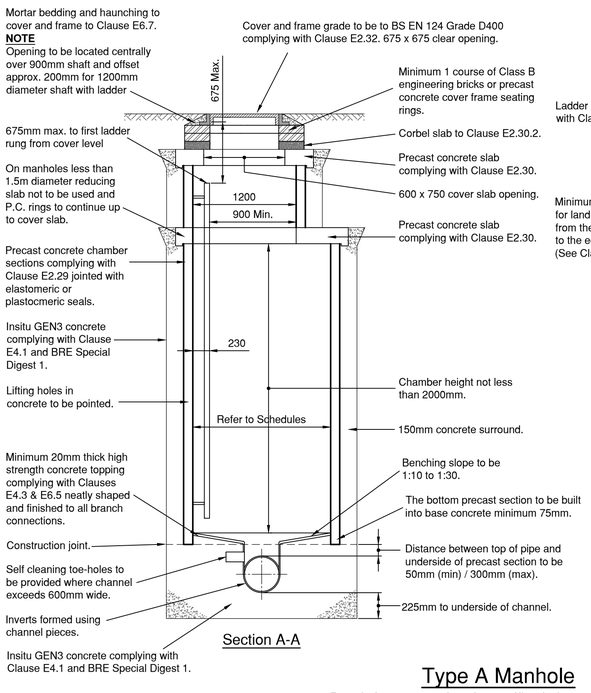

Section A-A

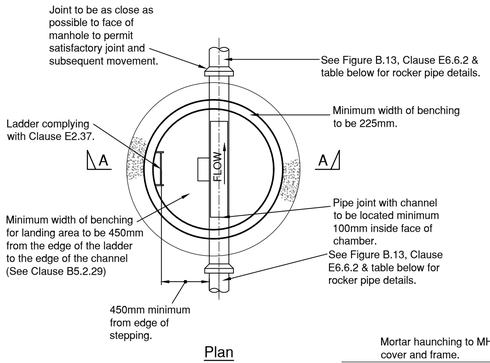

Plan

Rocker Pipe Lengths	
Nominal Dia (mm)	Effective Length (m)
150 - 600	0.6
601-750	1.00
over 750	1.25

Type A Manhole

Depth from cover level to soffit of pipe 3.0m to 6.0m

Based on Figure B24 - SSG Appendix C Design and Construction Guidance v2.3

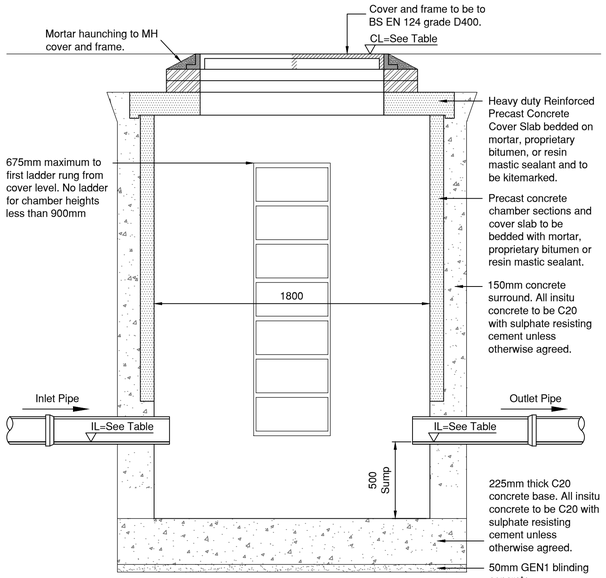

Typical Catchpit Construction Detail

Refer to Drainage Manhole Schedules FOR/E5139/450 to 472 for Catchpit Locations

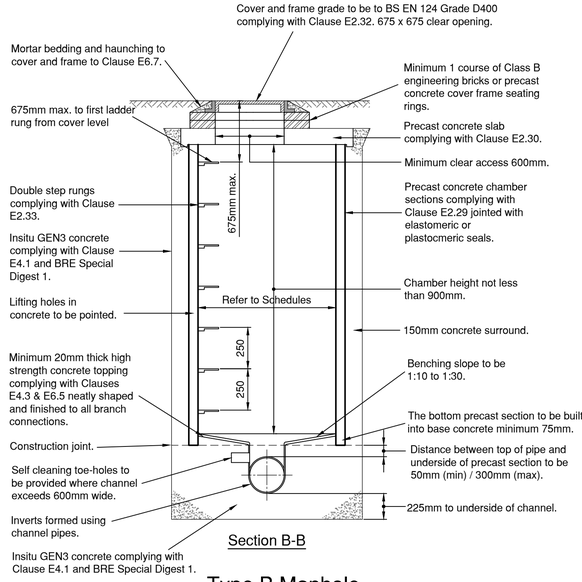

Section B-B

Type B Manhole

Depth from cover level to soffit of pipe 1.5m to 3.0m

Based on Figure B10 - SSG Appendix C Design and Construction Guidance v2.3

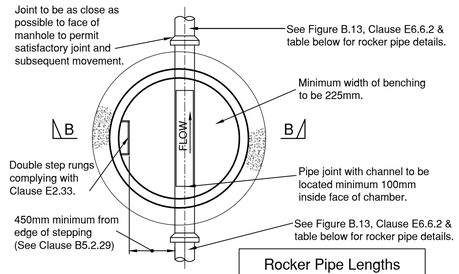

Plan

Rocker Pipe Lengths	
Nominal Dia (mm)	Effective Length (m)
150 - 600	0.6
601-750	1.00
over 750	1.25

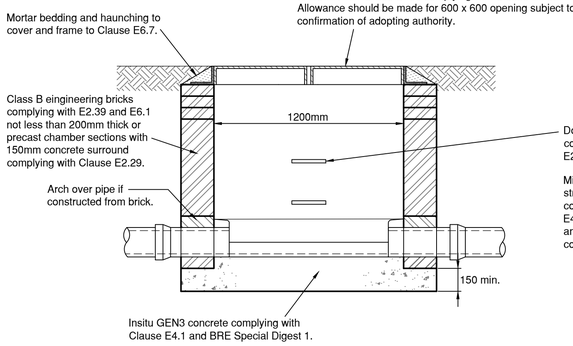

Section C-C

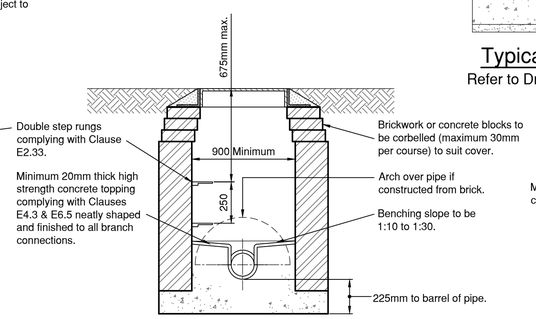

Section D-D

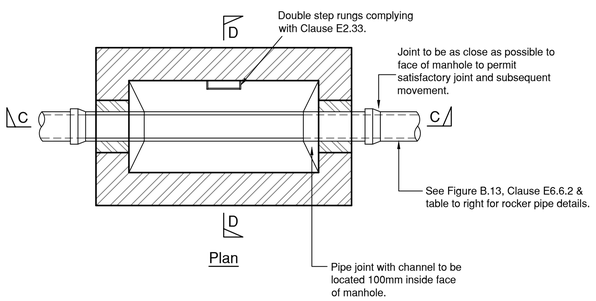

Plan

NOTES

1. ***Internal dimensions of manhole normally 1200mm x 900mm but manhole width should be increased for pipes larger than 450mm diameter to give 225mm benching each side and the brickwork /masonry units corbelled down to suit cover.***
2. The use of precast concrete chamber units to Clause E2.29 with 150mm GEN3 in-situ concrete complying with Clause E4.1 and BRE Special Digest 1 in place of brickwork construction is permitted, subject to Adopting Authority Approval.

Rocker Pipe Lengths	
Nominal Dia (mm)	Effective Length (m)
150 - 600	0.6
601-750	1.00
over 750	1.25

Type C1 Manhole

Depth from cover level to soffit of pipe less than 1.5m

Based on Figure B33 - SSG Appendix C Design and Construction Guidance v2 .3

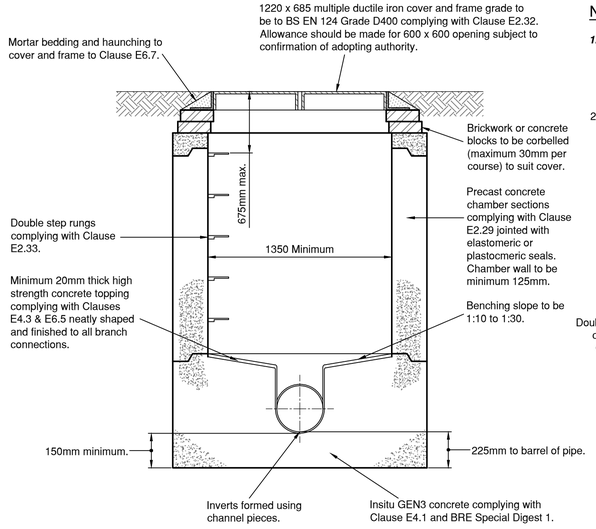

Section E-E

NOTES

1. ***Internal dimensions of manhole normally 1350mm but manhole diameter should be increased for pipes larger than 450mm diameter to give 225mm benching in accordance with Clause B5.2.29.***
2. The use of precast concrete chamber units to Clause E2.29 with 150mm GEN3 in-situ concrete complying with Clause E4.1 and BRE Special Digest 1 in place of brickwork construction is permitted, subject to Adopting Authority Approval.

Rocker Pipe Lengths	
Nominal Dia (mm)	Effective Length (m)
150 - 600	0.6
601-750	1.00
over 750	1.25

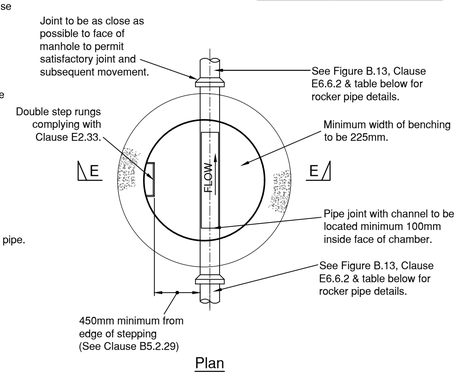

Plan

Type C2 Manhole

Depth from cover level to soffit of pipe less than 1.5m

Based on Figure B15 - SSG Appendix C Design and Construction Guidance v2.3

(Maximum pipe size 450mm diameter)

NOTES

1. This drawing should be read in conjunction with other Section 104 Drainage Construction Details, Foul and Surface Water Water Sewer Longitudinal Sections (200 Series), Foul Water Sewer and Surface Water Sewer Manhole Schedules (400 Series) & Domestic Drainage Layouts (450 Series).
2. All dimensions are in millimetres unless stated otherwise.
3. Do not scale from this drawing. Only written dimensions are to be used.
4. 150mm diameter pipework to be extra strength vitrified clay to BS EN 295 or BS 65 on Class S bed & surround.
5. 225mm diameter pipework to be extra strength vitrified clay to BS EN 295 or BS 65 or concrete Class M to BS5911 on Class S bed & surround.
6. 300mm diameter and greater pipework to be concrete Class M to BS5911 on Class B bed.
7. All construction to be in accordance with SSG Appendix C Design and Construction Guidance Version 2.3 dated 11 November and the specific requirements of IWNL.
8. Refer to geotechnical report for sulphate resisting class and ACEC class.
9. ***Outgoing pipes greater than 600mm diameter should be fitted with guard bars, safety chains [to BS EN 818-3] or other safety devices in accordance with the IWNL Water safety policy.***

SUBJECT TO ADOPTING AUTHORITY APPROVAL

CDM NOTES

1. EXISTING SERVICES. Depth of existing services must be determined prior to works commencing. The contractor is responsible for establishing underground services in accordance with HSE Guidance note HS (G) 47. Any services which would be within the proposed construction layers must be lowered to below the sub-base.

Rev.	Date	Details	By	Chkd	Appd
B	30.10.24	Subject to adopting authority approval.	KG	JC	TRS
A	03.05.24	Updated to Initial Tender Issue.	AD	JC	TRS

Client:- FOREMAN HOMES

Site:- Land West of Church Lane, & Horsemere Green Lane Climping, West Sussex

Drawing Title:- SECTION 104 DRAINAGE CONSTRUCTION DETAILS

Date: April 2024 | Scales: Not to Scale at A1

Drawn: MLM | Checked: MW | Approved: TRS

Drawing No. FOR/E5139/410 A

FOR CONSTRUCTION

RCP ARCHITECTURE & CIVIL ENGINEERING
Rogers Cory Partnership
Architectural and Civil Consultants
The Old School Old School Road Hook Hampshire RG27 9NJ
T: 01256 769269 E: mail@rcpconsultants.co.uk W: rcpconsultants.co.uk