New Trees

N1 Pin Oak
N2 Tree of Heaven
N3 Ash
N4 Holly
N5 Lime
N6 Holly

Drive way, car parking and cycle store to be laid to tarmac as a permable surface, The paths to the front doors to be slabs laid as a permable surface, the remainder to be laid to grass

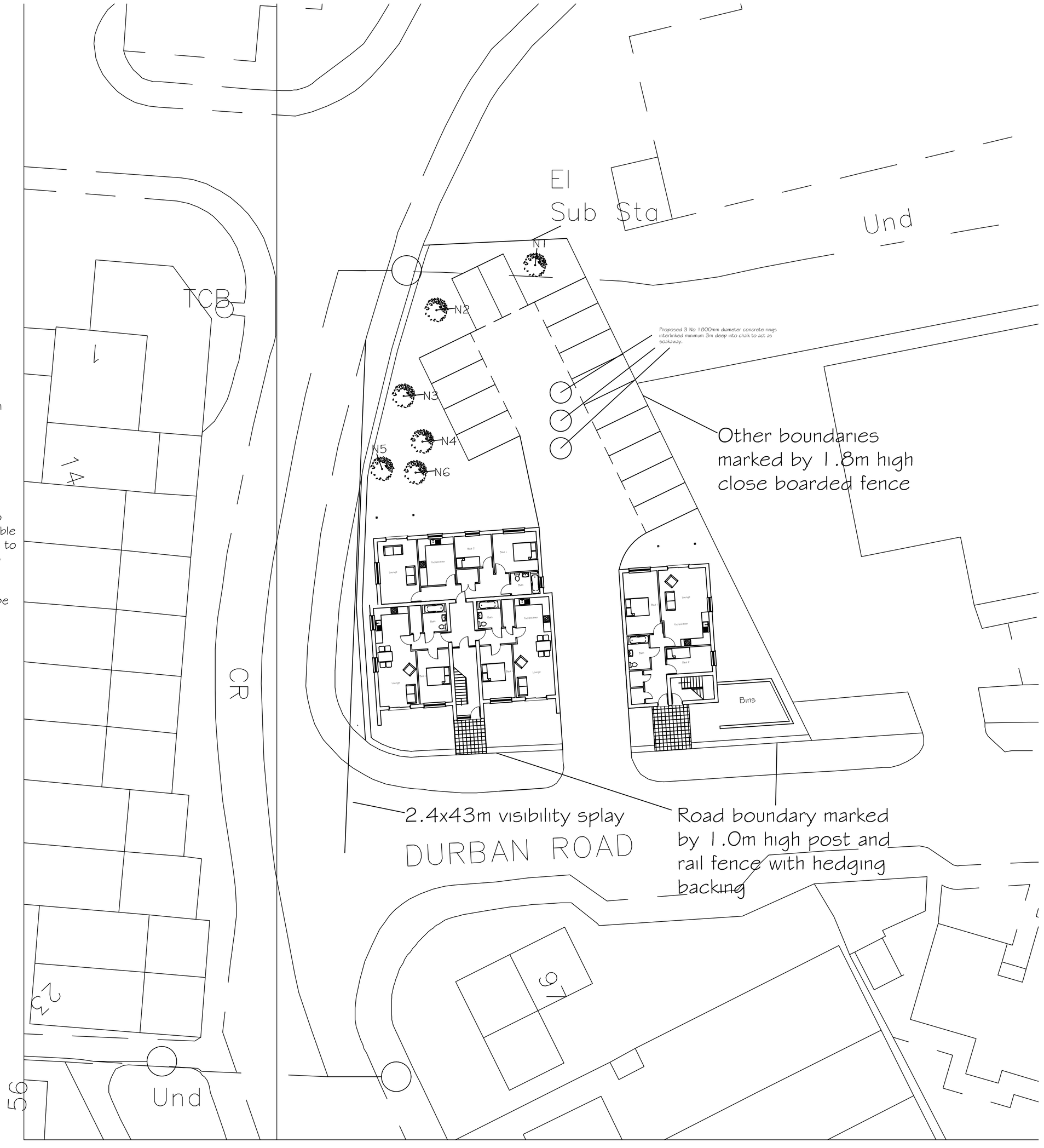

Layout Plan

0 1 2 3 4 5 6 7 8 9 10

SCALE 1:200

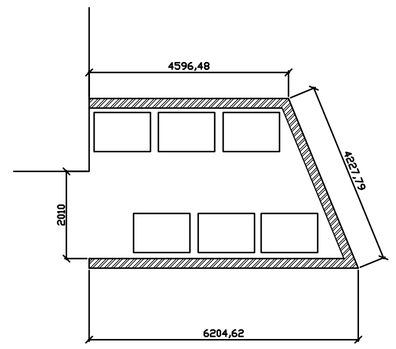

Proposed Bin Store Plan

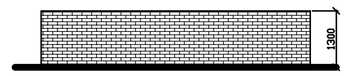

Proposed Bin Store South Elevation

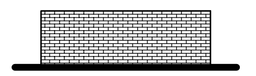

Proposed Bin Store East Elevation

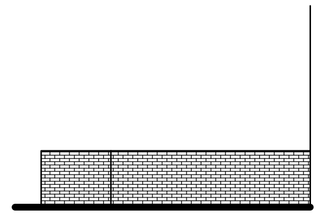

Proposed Bin Store North Elevation

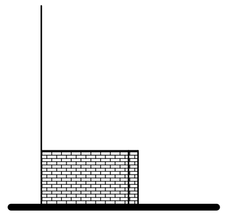

Proposed Bin Store West Elevation

Tony Rogers
Building Consultants
Address: 40 Dawn Crescent, Upper Beeding
West Sussex, BN44 3WH
Telephone: 01903 815225 Fax: 01903 815225

Rev.	Date:	Revision Description:
A	July 2016	Fence and hedge position altered for visibility splay
B	August 2016	Fence and hedge position altered to Wilbur Associates recommendation

Client: Mr P Hudson

Address: 18 Durban Road
Bognor Regis
West Sussex
PO22 9QT

Project: Proposed flats

Scale: 1:100 1:200
Paper Size A1

Date: December 2015

Drawing No: 15/1051/04

Drawn By: AWR

Revision: B

ARUN DISTRICT COUNCIL BRIGHTSUN