The Sussex Tree Company

LLP Arboricultural Method Statement; (BS:5837)

Abbots Lawn

Sylvan Way

Bognor Regis

PO21 2RS

September 2019

ARUN DISTRICT COUNCIL BR/55/20 PL

Arboricultural Method Statement (BS:5837)

for…

Bryan Butcher

Rainbow Cottage

Nyetimber Lane

Bognor Regis

PO21 3JX

Contents

1.0 Introduction / Background: 3
2.0 Report limitations: 4
3.0 Methodology: 5
4.0 Appendices: 8

Abbots Lawn, Sylvan Way, Bognor Regis, PO21 2RS

1.0 Introduction / Background:

1.1. We are instructed by Bryan Butcher, ('the client'), to undertake arboricultural reports in support of a planning application, following guidance set out in the British Standard document number 5837 "Trees in relation to design, demolition and construction – recommendations" (2012), and publish our findings in a report document, for a fee.

1.1.1. Instruction follows recommendations made by Mark Warwick, Tree Officer for Arun District Council, in his comments on the Application for Planning Permission for this development, (see Appendix …).

1.1.3 These reports encompass data collection, analysis and resultant recommendations and are presented in the following formats:

- Tree survey
- Tree constraints analysis and associated plan
- Tree protection measures and associated plan
- Arboricultural impact assessment
- Arboricultural method statement

1.1.4 The survey, constraints analysis, protection measures, (and associated plans), and the impact assessment have been delivered to the client in a separate document titled, 'The Sussex Tree Company LLP report in support of a planning application, (BS:5837) – Abbots Lawn: tree survey; tree constraints analysis and associated plan; tree protection measures and associated plan; arboricultural impact assessment'

1.2.1 This document is the arboricultural method statement, (AMS), and is supplementary to 'The Sussex Tree Company LLP report in support of a planning application, (BS:5837) – Abbots Lawn: tree survey; tree constraints analysis and associated plan; tree protection measures and associated plan; arboricultural impact assessment'

1.3.1 The AMS details:

1.3.1 The extent of and methodologies to be employed for operational arboricultural works necessary to enable the progression and successful completion of the proposed development, (including access facilitation pruning and new tree installation, if necessary/appropriate);

1.3.2 Tree protection measures, and installation methodologies

1.3.3 Ground protection measures, and installation methodologies

1.3.4 Materials and equipment storage requirements, (in relation to tree protection);

1.3.5 Phasing and monitoring schedule, (in relation to tree protection).

2.0 Report limitations:

2.1 This report is compiled on information conveyed to the Sussex Tree Company LLP, (STC), by the client, and by information and data acquired by STC on site visits. STC cannot accept liability for any omission of information or data pertinent to the production of these reports from the client or his agents, or from any other body.

2.2 This report will seek to clarify the existence or otherwise of statutory protections on trees for the site and publish findings. However, should any operational works be commissioned as a result of the survey it is incumbent on the contractor undertaking those works to seek clarification from the Local Planning Authority and give any notifications/seek any permissions should protections be in place and not covered by the granting of the proposed project's planning permissions. After accessing the LPA's on-line GIS mapping system and selecting the appropriate map layers: Tree Preservation Orders, (TPO), and Conservation Areas, (CA). The author has established there are no TPOs in force for any trees potentially impacted by the proposed development. The proposed development is not within the boundaries of a Conservation Area. (See Appendix 3 for a screen-shot of the appropriate web-page).

2.3 The Wildlife and Countryside Act 1981, as amended by the Countryside and Rights of Way Act 2000 provides statutory protection to birds' nests whilst under construction or in use, and any contents therein. Any species listed in the Conservation of Habitats and Species Regulations 2017, are also protected, (commonly known as 'European Protected Species' – 'EPS'). Some may create habitats within trees. This is particularly relevant to bats as trees and features can provide roosts. All bats and their roosts are protected. Whilst this report does make an assessment to the likelihood or otherwise of bat roosts, this is indicative and cannot be relied upon, as all observations are made from ground level. It is incumbent on any contractor undertaking operational works to ensure appropriate, aerial checks are made for EPS before commencement of works with the potential to disturb or destroy a roost.

2.4 To achieve the study objectives stated in this report, STC LLP were required to base our conclusions on the best information available during the period of the investigation and within the limits prescribed by our client in the agreement. No investigative method can completely eliminate the possibility of obtaining partially imprecise or incomplete information. Thus, we cannot guarantee that the investigations completely defined the degree or extent of e.g. species abundances or habitat management efficacy described in the report.

2.5 All rights in this report are reserved for the commissioning client and The Sussex Tree Company LLP. The report or its constituent contents may not be lent, sold, hired out or divulged to any 3rd-party not directly involved with the development project unless permission is sought and obtained from The Sussex Tree Company LLP.

3.0 Methodology:

3.1 Arboricultural Works:

3.1.1. Trees T5 – T10 in the tree survey list will be removed, also the resultant root-plates will be ground or dug out.

3.1.2 'Access facilitation pruning' to T1 will occur, to a height of 5.5m above present ground level, to enable unrestricted vehicular passage in and out of the site. Works are to be undertaken by qualified arborists, to BS:3998 standards.

3.1.2.a Any works will be undertaken using hand-tools only; either professional pruning saws, loppers or secateurs.

3.1.3 For the 4 new tree installations, the project designer or architect/landscape architect and the project arboriculturalist will specify, in accordance with the British Standard document, 'BS:8545 Trees: from nursery to independence in the landscape – Recommendations':

3.1.3.a The species and form of the 4 trees to be installed, (as mitigation for the loss of T5 – T10);

3.1.3.b The provisional installation location of the 4 trees

3.1.4 The installation of specialist root protection systems for T1 – T4 must occur prior to the construction phase of the development project. Whether these are final or temporary root protection systems, the project designer or architect/landscape architect and the project arboriculturalist will specify the methodology:

3.1.4.a The removal of existing planted beds, a significant, (historic),tree-stump and hard surfacing, (tarmac), located within the RPAs of T1 – T4. (The methodology applies specifically within these RPAs):

i. Any surface vegetation in planted beds will be removed by operatives using handheld tools, (petrol-driven or battery-driven machinery is permitted). The above-ground woody sections of the historic stump will be cut to as near to ground level as is possible, using hand-held tools, (petrol-driven or battery-driven machinery is permitted).
ii. Any rooting resultant structures will be removed, if appropriate, using hand-held tools. In the event of encountering large rooting structures not suitable for removal utilising hand-held tools, the roots will be removed by using a stump-grinding machine to remove the root-plate, under the supervision of the project arboriculturalist. .
iii. The root-plate of the historic stump will be removed using a stump-grinding machine, under the supervision of the project arboriculturalist. Excavations created will not exceed 300mm below present ground level.
iv. Existing hard surfaces, (with the RPAs of T1 – T4), will be removed under the direct supervision of the project arboriculturalist. Use of appropriately sized mechanical excavators is conditionally permitted: machines will always be sited outside the RPAs; machine operators will utilise a 'reach-in, drag-out' working protocol at all times; machine use will not be permitted within 0.5m of the canopy of T1 or the root/stem junction, where a hand-dig methodology will be adopted; any excavations

will be performed incrementally, in layers of 50mm, until either the excavation can accommodate the installation specifications of the root protection system selected, (see Appendix 2), or significant structural or vascular roots are observed by the

project arboriculturalist, after which a hand-dig protocol will be adopted.

v. In the event that excavations are not sufficient to permit the installation of the root protection system selected, ground levels will be raised to accommodate the installation of the system.

vi. Temporary root protection systems will be installed to product specifications, (see Appendix 2), and temporary surfacing will then be installed. If temporary root-protection systems and surfaces have been installed, these will then be removed, (following the methodology detailed above, as appropriate), and the final, selected root protection system will be installed to product specifications, (see Appendix 2), and new surfacing will then be installed.

3.2 Tree Protection Methodology

3.2.1 Prior to the commencement of any enabling works, a bark protection system is to be installed around T1, from ground level to a height of 1.8m, (or its 'crown-break'), following the methodology cited in Appendix 2, or by the erection of a wooden rectangular structure, (constructed from 'marine-plywood' of at least 150mm thickness), not in direct contact with the tree's bark. The bark-protection system is to remain in place until the completion of the project development works.

3.2.2 Tree protection fencing, as specified in Appendix 1 will be erected beyond the extremity of the RPAs of T11 -T13 and will remain in place until the completion of the project development works.

3.2.2 Following the completion of works specified in 2.2.2. and 2.2.3., the project arboriculturalist will complete an on-site compliance inspection.

3.2.4 If, at any point during the project's construction phase(s), access into the bark protection installed around T1 or the tree protection fencing around T11- T13 is required, the project's delivery manager will notify the project arboriculturalist and ensure his/her attendance at the site, to ensure the access is performed without any impact on the retained trees and the bark protection and/or the tree protection fencing is restored to a compliance. If an unplanned breach occurs, the project's delivery manager will rectify the breach and notify the project arboriculturalist, who will attend the site to ensure compliant restitution of the tree protection measures.

3.2.5 At the completion of the project, the project arboriculturalist will attend the site to ensure the tree protection measures are removed without impacting the retained trees in any way.

3.3 Ground Protection Methodology

3.3.1 As far as the author is aware at present, no other ground protection installation works than those resulting from the works specified in 2.2, are required.

3.3.2 Adherence to the works phasing ensures the RPAs of T1 – T4 will be protected; by the installation of specialist root protection systems with either a temporary or permanent hard-surfacing top layer.

3.3.3 Adherence to erection of and compliance with the specifications of tree protection

fencing for T11 – T13 ensures no heavy or harmful materials will be stored in the RPAs of these trees.

3.3.4 Adherence to both 3.3.2. and 3.3.3 ensures no potential compaction of soil in any RPA of a retained tree

3.4 Material Storage

3.4.1 Ideally, spoil from the removal of existing hard surfacing, and any associated substrate, should be removed from the site contemporaneously, however, in circumstances where this isn't achievable, an area will be identified by the operational site manager for storage.

3.4.2 The selection of the location for the spoil storage area will be outside the RPAs of trees to be retained, and sufficient distance from the canopies of retained trees to ensure no possibility of machine strike to those canopies.

3.4.3 The selection of the location for the spoil storage area will consider and avoid the need for any vehicle involved in spoil removal to make incursions into the RPAs of any retained trees.

3.4.4 Should it be required, an area for the storage of substances harmful to the health of trees, (such as fuels, cement etc.), will be selected by the operational site manager sufficiently away from the RPAs of retained trees so as to ensure no potential spillage or leakage will leach into soils within these RPAs.

3.5 Phasing and monitoring schedule

3.5.1 Appendix 3 details the phasing and monitoring requirements for a development/construction scheme to achieve compliance with 'BS:5837, Trees in relation to design, demolition and construction – Recommendations'.

3.5.2 In relation to this project, Table 1, below, specifies applicable phasing and monitoring:

Table 1: Proposed schedule of works

Timescale	Task	Responsibility
1. Pre-	Pre-commencement meeting	To be arranged by developer, with

development	with the development designer/architect(s) for identifying appropriate root protection strategies, (weight bearing, cellular root confinement systems)	arboricultural consultant
2. Pre-development	Pre-commencement meeting with all relevant parties	To be arranged by contractor
3. Pre-development	Preliminary tree works identified, approved & sent for tender	To be arranged by developer, with arboricultural consultant
4. Pre-development	Pre-construction tree work implemented and supervised	To be arranged by developer, with arboricultural consultant
5. Pre-development	Erection of protective barriers, (bark guards and tree protection fencing), as agreed and approved	To be arranged by developer, with arboricultural consultant
6. Pre-development	Carry out supervisory visits as agreed and report findings and recommendations	To be arranged by developer, with arboricultural consultant
7. During development	Installation of appropriate root protection strategies, (weight bearing, cellular root protection / confinement systems), for T1 – T4, prior to other enabling / construction works	To be arranged by developer, with arboricultural consultant
8. During development	Carry out supervisory visits as agreed and report findings and recommendations	To be arranged by developer, with arboricultural consultant
9. Post development	Phased removal of protective barriers with soft landscaping	To be arranged by developer, with arboricultural consultant
10. Post development	Inspect retained trees and carry out remedial tree work as necessary	To be arranged by developer, with arboricultural consultant and applicable contractor
11. Post development	Installation of new trees implemented and supervised	To be arranged by developer, with arboricultural consultant
12. Post development	Adoption of post-planting care plan for newly installed trees	To be arranged by developer, with arboricultural consultant and applicable contractor
13. Post development	Inspect newly installed trees	To be arranged by developer, with arboricultural consultant

4.0 Appendices:

Appendix 1: BS5837 Recommended protective barrier (Fence A-Herras type fence)

Appendix 2: Root protection systems

Appendix 3: Bark saving protection

Appendix 4: Glossary of terms / key to interpreting arboricultural data
Appendix 5: Phasing and monitoring flow diagram
Appendix 6: Tree Protection Plan
Appendix 7: Summary of author's qualifications and experience

Appendix 1: BS5837 Recommended protective barrier (Fence A-Herras type fence)

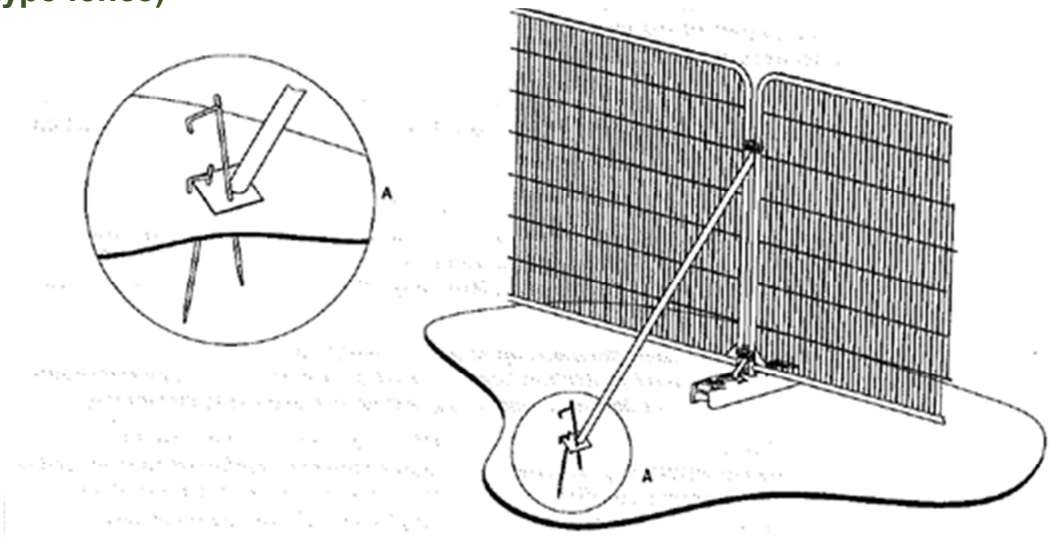

a) Stabilizer strut with base plate secured with ground pins

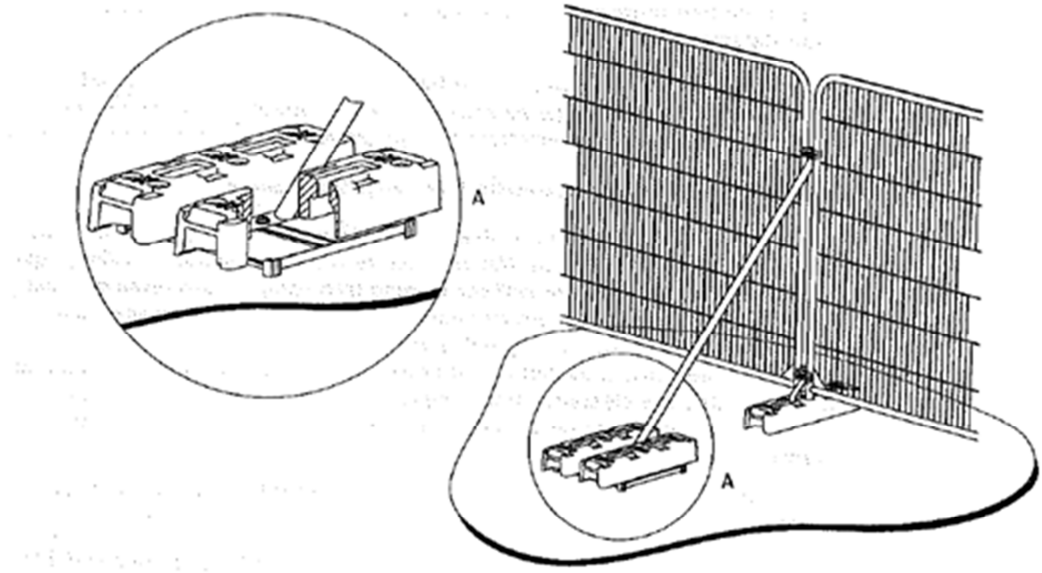

b) Stabilizer strut mounted on block tray

Appendix 2: Root protection systems:

STC recommends utilising the 'Core TRP' system to protect the roots of T1 – T4. A full specification/installation guideline, and product specification and installation downloads can be accessed by following this link: https://www.corelp.co.uk/core-tree-root-protection/

INSTALLATION:

1. Existing tarmac will be removed, following the methodology detailed in 3.1.4.a (iv). The underlying, existing substrate will be exposed. Any minor root pruning to roots protruding from the substrate, (as a result of the tarmac removal operations), will be undertaken by the project arboriculturalist. Any voids in the substrate will be backfilled with a suitable topsoil
2. Suitable edge restraints will be installed at the extremities of the RPAs, to the level of the finished tarmac.
3. A TRP 30 membrane layer will be installed directly on top of the all the exposed substrate in the RPAs of T1 – T4.
4. A TRP geogrid will be installed on top of the membrane layer.
5. Depending on the expected vehicle weight utilising the entrance to the car park, a TRP panel depth of either 100mm, (sufficient for up to 6 tonne vehicles), or 150mm, (sufficient for up to 16 tonne), will be installed and filled with 4-20mm graded, clean, angular aggregate, (washed to provide reduced fines SUDS compliant fill material). This operation may require using galvanised pins, to secure the panels in situ prior to filling. If so, care will be taken to avoid the pins striking any structural or vascular roots of T1 – T4.
6. If the installation is permanent, then a porous tarmac/asphalt will be laid directly on to the top of the filled TRP panels, (see diagram, below); if the installation is temporary, then a TRP 10 membrane is laid on top of the panels, and a 30-50mm layer of temporary wearing course of the same aggregate used in filling the panels on top of that, (see diagram, below),
7. The project arboriculturalist will be in attendance for the first installation of the root protection system, to verify correct procedures and protocols have been followed.

Permanent installation: porous tarmac / asphalt

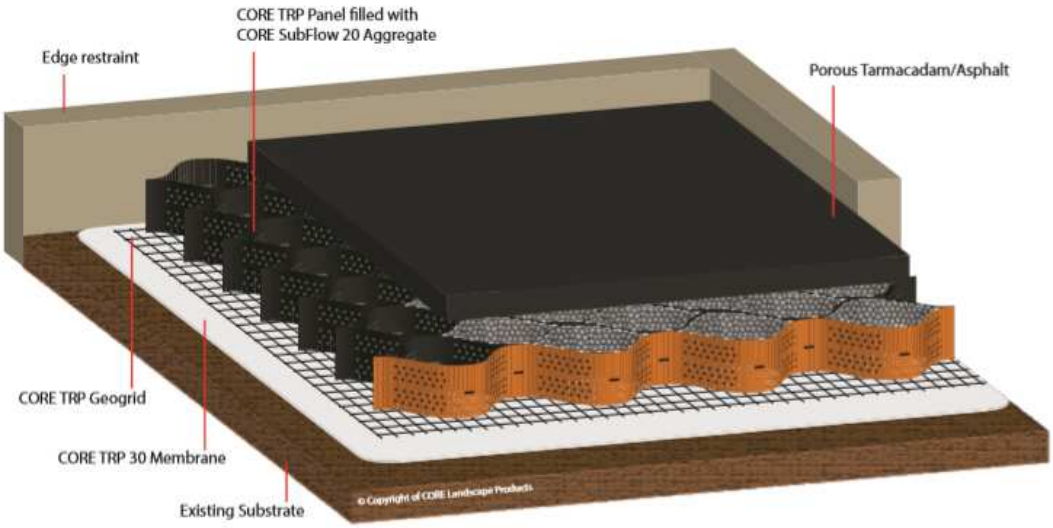

Permanent installation: porous tarmac / asphalt

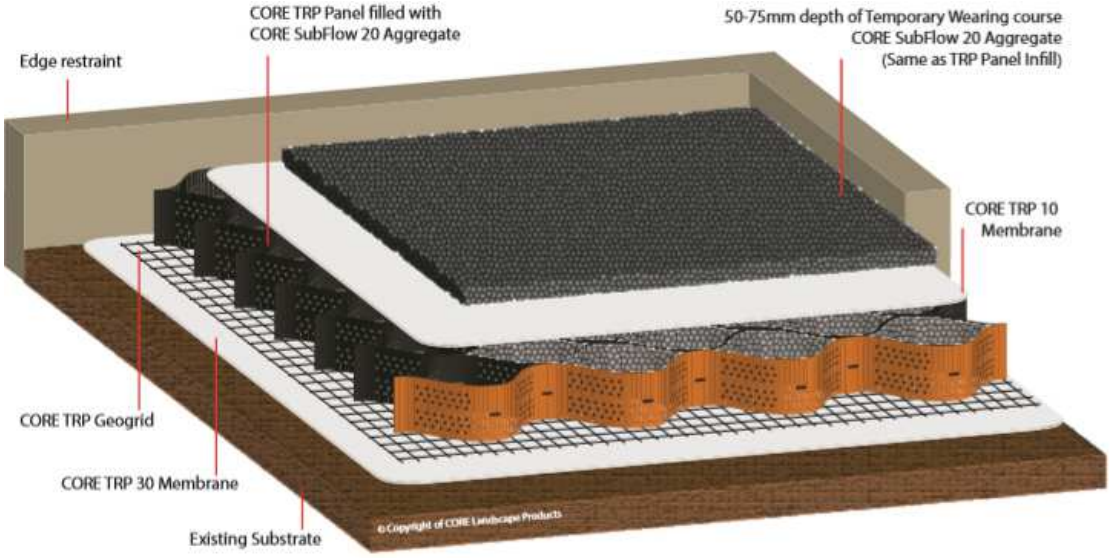
CORE TRP Panel filled with
CORE SubFlow 20 Aggregate
50-75mm depth of Temporary Wearing course
CORE SubFlow 20 Aggregate
(Same as TRP Panel Infill)
Edge restraint
CORE TRP 10
Membrane
CORE TRP Geogrid
CORE TRP 30 Membrane
Existing Substrate
© Copyright of CORE Landscape Products

Appendix 3: Bark-saving protection:

Materials needed to create a 'bark-saver':

Drainage Pipe: Inside Diameter x Height	Carpet Padding (m²)	Chain Lock Ties	No. of Ties	No. of Locks/ Bolts
300mm x 1.2m	1.25	1m	2	3
400mm x 1.5	1.75	1.25m	2	3
500mm x 1.8m	2.7	1.75m	2	3
600mm x 1.8m	3.6	2.25m	3	3

CONSTUCTION

1. Cut drainage pipe with a circular saw or with a hack saw. Each section of pipe will be cut twice to form 2 halves:

Whole Pipe

Cut Pipe

Label on one end of the pipe TOP. This will make the ease of refitting pieces together more easily. If making a quantity, label with a number and then 'top', e.g.: TOP – 1. Store same numbers together:

2. Cut Chain Lock Ties to specified length, set aside quantity of Locks needed per tie.

3. Cut fibre/felt carpet padding to specified length

INSTALLATON

1. Wrap trunk with carpet padding

2. Wrap carpet padding with both halves of split BarkSavers so it protects the bark against injuries from inside the pipe

3. Wrap chain lock ties around: at the top, another piece in the middle, and a third piece at the bottom

4. Connect the chain lock ties with the locks/bolts, which also act as a security measure:

Appendix 4: Glossary

Abbreviations and glossary: certain commonly used phrases have been abbreviated for ease of delivering this survey. These are listed below. Certain technical terms used in arboriculture may appear in this report and their precise meaning may not be familiar to 'lay-people', so the author has supplied brief explanations. These are listed in the glossary below:

Abbreviations:

NWR –	No works recommended
GL –	Ground level
AGL –	Above ground level
DBH –	Diameter at breast height
VTA –	Visual tree analysis
DOC –	Duty of Care
CODIT –	Compartmentalisation of dysfunction/damage in trees

Glossary:

Access Facilitation Pruning – *description of an arboricultural operational task* – A one-off tree pruning operation necessary to provide access for operations on site, which, when complete, are without significant adverse impact on tree physiology or amenity value.

Aerial investigation and report – *a description of arboricultural consultancy practice* – to undertake an investigation of aerial sections of a tree, not observable from ground level, using a systematic approach; to analyse structural integrity and any observable features – recommended when the VTA analysis from ground level is incomplete/inconclusive and the consultant has seen a feature/s which require further investigation to decide on a risk-rating and/or works priority.

Arboriculturalist – *description of professional status* – person who has gained expertise in the field of trees, (with particular refence to construction projects), through relevant education, training and experience.

Arboricultural Impact Assessment (AIA) – *arboricultural consultancy task for trees on development sites* – a study, undertaken by an arboriculturalist, to identify, evaluate and possibly mitigate the extent of direct and indirect impacts on existing trees that may arise as a result of the implementation of any site layout proposal.

Arboricultural Method Statement – *arboricultural consultancy task for trees on development sites* – a document describing the methodology for the implementation of any aspect of development that has potential to result in loss of or damage to a retained or newly installed tree.

Bifurcated – *description of tree architecture* – when a tree has 2 distinct stems.

Cambium/cambial – *description of tree morphology* – the layer of

cellular structure immediately behind the bark, where vascular tissues are created.

Cavity – *description of tree morphology* – a feature of a tree's architecture that is an incursion into the interior wood in some way, shape or form, usually formed as a result of a branch tearing away from the tree, pathogenic incursion or animal incursion, (or combination of all of these).

Canker – *description of tree morphology* – an area of bark/wood that exhibits dysfunctional growth patterns, often with localised degradation in structural integrity.

Construction Exclusion Zone – *arboricultural consultancy terminology* – an area based on the RPA where access is prohibited for the duration of the enabling and construction phases of a development project

Crown – *description of tree architecture* – the part of the tree distinct from the roots and stem(s), where most of the tree's leaves are, supported by primary, secondary, tertiary branches and twigs/shoots.

Drop-crotching – *description of arboricultural operational practice* – to prune a tree by selecting branches with terminal growth as the reduction's desired length from crown perimeter.

Epicormic – *description of tree morphology* – a type of branch/shoot growth emergent from adventitious buds or parenchyma tissue present within the layer of wood immediately below the tree's bark, (cambium). These branches attach to the tree's branches/stems in a way that is structurally much weaker than branch attachments made in the normal course of a tree's development.

Ganoderma applanatum – *a tree pathogen* – commonly known as the artist's bracket, artist's conk or bear bread. It is a wood-decay fungus that causes rot of the tree's heartwood. Its fruiting bodies are hard brackets that appear white at first and then later brown in colour. https://en.wikipedia.org/wiki/Ganoderma_applanatum

Internal investigation and report – *a description of arboricultural consultancy practice* – to undertake an investigation of the trees internal wood/wood structures using specialist equipment; either a Resistograph drill machine or a tomograph machine. These will give readings that when analysed that can be interpreted by the arboricultural consultant to make judgments about the integrity or otherwise of the tree's internal wood structures and deduce/extract from these the likelihood of failure and/or recommendations to mitigate risks.

Kretzschmaria deusta – *a tree pathogen* – commonly known as 'brittle cinder' is a fungus and plant pathogen. It is a 'soft rot', preferentially degrading the cellulose, then later both the cellulose and lignin that make up wood cells. It colonises the lower stem and/or roots of living

trees through injuries or by root contact with infected trees. It can result in sudden breakage/complete failure from the root/stem junction in otherwise apparently healthy trees.

https://en.wikipedia.org/wiki/Kretzschmaria_deusta

Lesion – *description of tree morphology* – a small area of dysfunctional bark tissue.

Limb – *description of tree morphology* – branch.

Management recommendations – *arboricultural consultancy task for trees surveyed* – comments based on VTA observations, on the condition of the tree, group or woodland and recommendations for future works.

Monolith – *description of arboricultural operational practice* – to partially fell a tree, but leave a designated length, (above ground level), of stem standing; the remaining section is not considered a hazard and will become a site for wildlife habitation.

Re-trenchment pruning – *description of arboricultural operational practice* – crown reduction in late-mature and senescent trees to anticipate or keep pace with decline in the crown.

Root Protection Area, (RPA) – *arboricultural consultancy terminology* – a layout design tool showing the minimum area needed around a tree's stem to protect its subterranean rooting structures so as to maintain the tree's future viability, if left undisturbed.

Root/stem junction – *description of tree morphology* – where the root and the stem join.

Scaffold – *description of tree morphology* – a primary branch; one that grows directly from the stem and acts as a support for secondary branching

Self-set – *description of a tree's origins* – when the tree has been naturally propagated, in other words, not planted by human agency.

Tree Constraints Plan– *a description of arboricultural consultancy task for trees on development sites* – a scale drawing showing the pre-existing trees, groups of trees and hedges, (and other landscape features), on the site of a proposed development as well as the footprint of the proposed development, thereby illustrating what, if any, constraints the tree-scape imposes.

Tree Protection Plan– *a description of arboricultural consultancy task for trees on development sites* – a scale drawing incorporating finalised design proposals for a development, showing locations and dimensions of retained trees, there RPAs and the location of tree and landscape protection measures; also, the locations of any new trees to be installed, (and any tree and landscape protection measures required for these).

Trifurcated – *description of tree architecture* – when a tree has 3 distinct stems

Union – *description of tree morphology* – a site within the tree's architecture where 2 branches or stems, (or combination of both), originate

Veteran Tree – *arboricultural specific terminology* – a tree that, by recognised criteria, shows up to 4 features of biological, cultural or aesthetic value that are characteristic of, but not exclusive to, individuals surviving beyond the typical age range for the species concerned. These might be large girth, habitat features, signs of crown retrenchment and hollowing of the stem.

Wound-wood/reaction wood – *description of tree physiology* – a type of wood grown by trees, distinct from wood grown in the usual course of development, and in reaction to a wounding event, as part of the CODIT defense strategy trees have. Wound-wood has greater strength properties than wood grown in the usual course of development.

Appendix 5: Phasing and monitoring flow diagram

Arboricultural Method Statement (BS:5837)

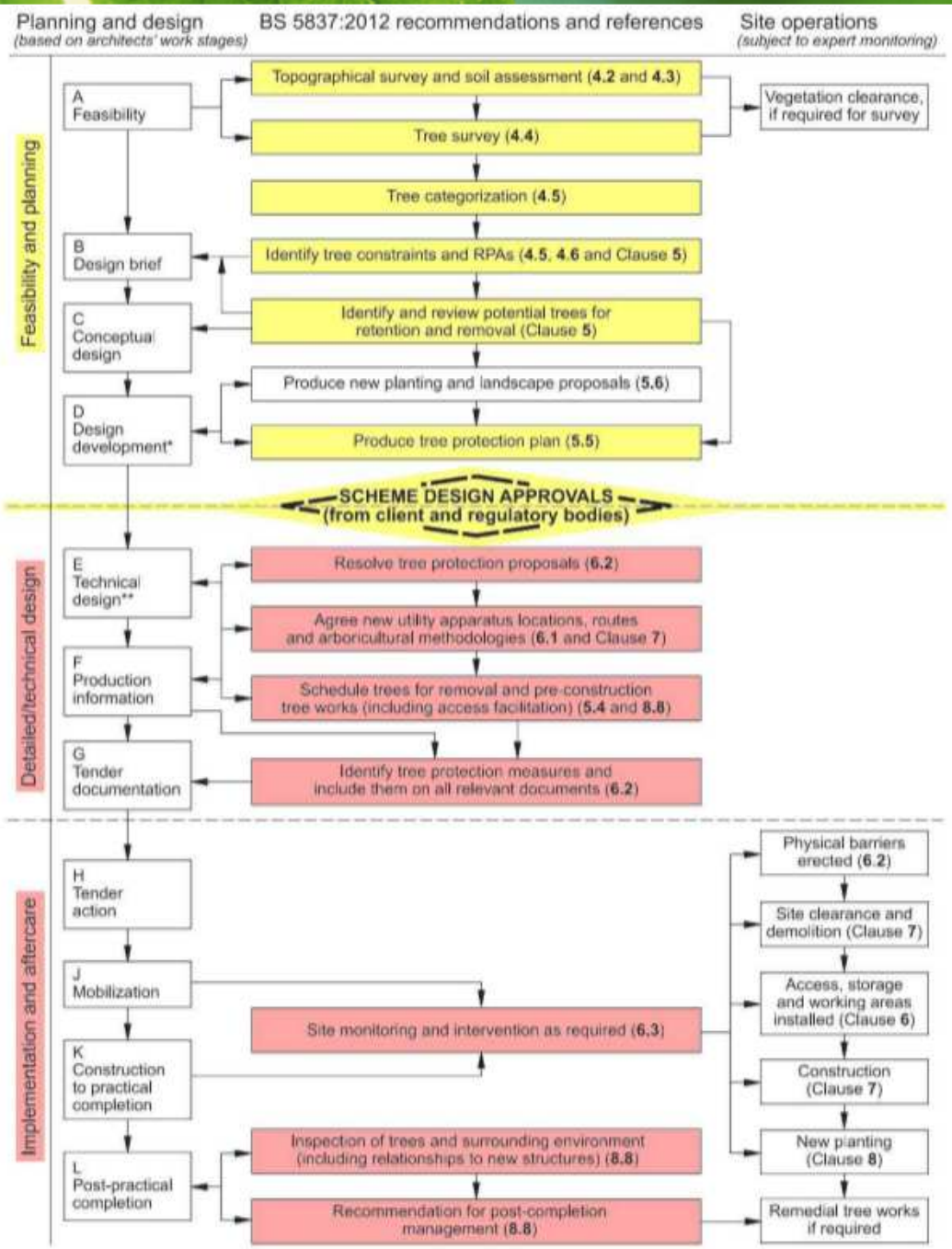

** The design development stage D in particular is an iterative process, responding to and resolving constraints as they emerge but, once completed, there needs to be a high level of certainty for proposed outcomes.*

*** See Commentary on Clause 6.*

ARUN DISTRICT COUNCIL BR/35/20/PPL

Appendix 6: Tree Protection Plan

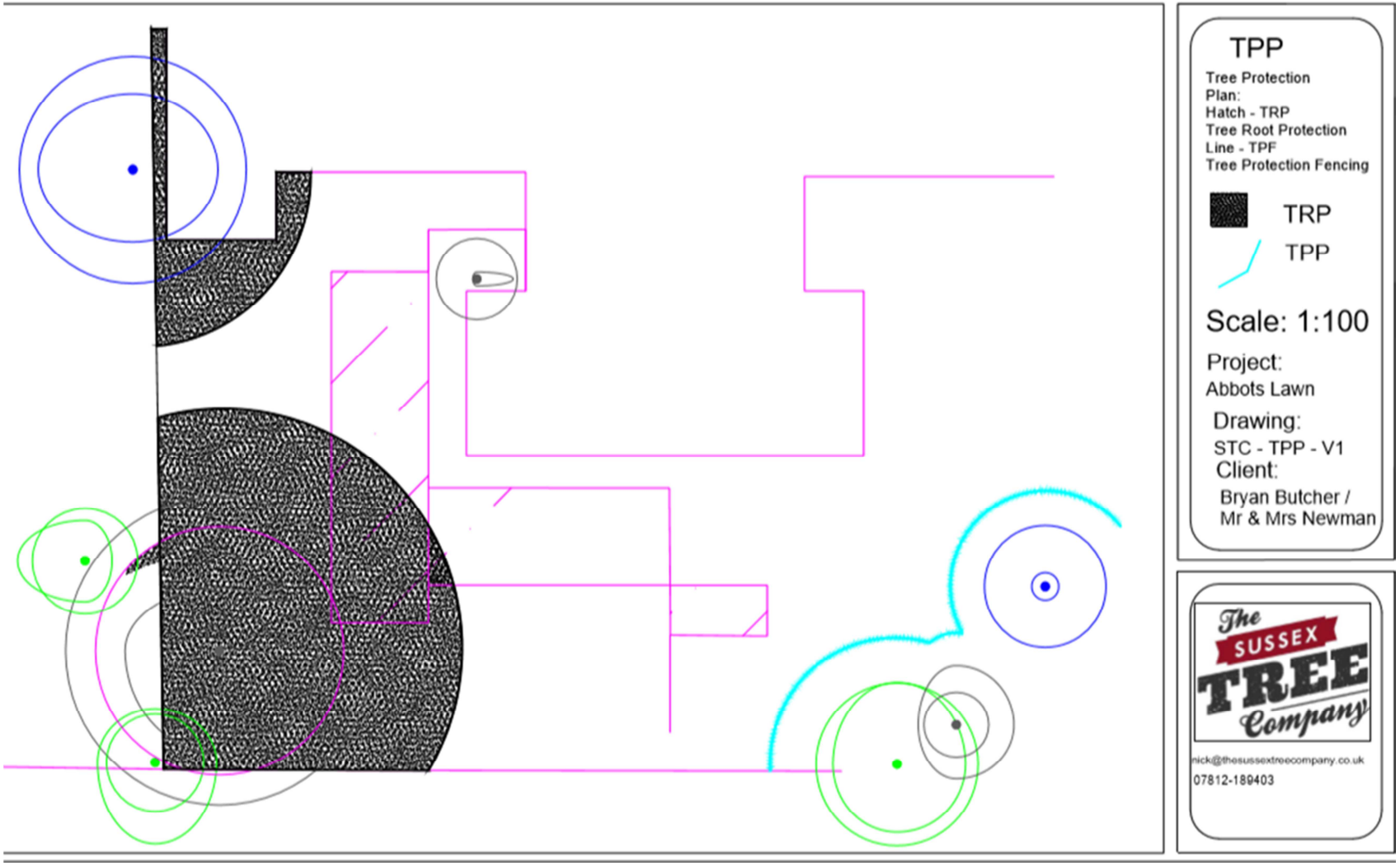

Appendix 6: Summary of author's qualifications and experience

The author, Nick Eddison, has the following qualifications and experiences and has undertaken CPD as described, below:

i. Qualifications

BA (Honours): Politics, Philosophy and History, (Birkbeck College, University of London)

Level 4 Diploma in Arboriculture, (Merrist Wood)

LANTRA Professional Tree Inspection Certificate

Arboricultural Association Certificate in Undertaking Aerial Tree Inspections

Arboricultural Association Certificate in Risk Assessment for Commercial Arboriculture

Arboricultural Association Certificate in Subsidence Reporting in relation to Trees

Arboricultural Association Certificate in Assessing Tree Risk – Likelihood of Failure

Arboricultural Association Certificate in Assessment of Tree Forks

Named Manager in the Arboricultural Association's approved contractor scheme for a medium/large business

Certificate in Bat Awareness Training: compliant with BS: 8596: 2015 – Surveying for Bats in Trees and Woodland

Certificate of Completion in training for AutoCAD and 'Keytree' – Keysoft Solutions

NPTC Level 2 Certificates in: Chainsaw Cross-Cutting and Maintenance; Felling and Processing Trees up to 380mm; Tree Climbing and Aerial Rescue; Use of chainsaw from a Rope and Harness

City and Guilds: Signing and Guarding, (Chapter 8)

First Aid at Work Certificate, (Forestry)

ii. Practical/relevant experience

Senior Partner in The Sussex Tree Company LLP – business leader
8 years as a practicing Arboricultural Consultant
3.5 years as a Director of an arboricultural business, embedded in a corporate group business structure

Over 20 years' experience as a practicing Climbing Arborist; in the

domestic, commercial and civil arenas.
Over the preceding 8 years the author has undertaken and delivered multiple Tree Condition Survey Reports; BS:5837 Tree Surveys and Arboricultural Reports in support of planning applications; Aerial Inspection Reports; Subsidence Reports; 'Resistograph' Internal Investigation Reports; Tree Hazard Assessment Report; also worked as Project Arboriculturalist for civil development projects.

iii. Continuing professional development

The author periodically attends courses and lectures in order maintain his knowledge base and to further his learning and development. Examples of recently attended CPD events: a training day for AutoCAD and the 'Keytree' application, from Keysoft solutions – September 2019; the most recent meeting of TDAG, (Trees in Design Action Group) – September 2019; a seminar in morphophysiology of trees at Barcham tree nursery – summer 2019; Arboricultural Association's Subsidence Reporting course – Spring 2019; Arboricultural Association's Aerial Tree Inspection course – Spring 2019; the Arboricultural Association's Business Masterclass – Winter 2019; and Claus Mattheck's farewell lecture at Loughborough University in the summer of 2018.

The Sussex Tree Company LLP:

We are providers of specialist services to the Arboricultural and Development industries in the UK:

Arboricultural Consultancy: all requirements are serviced

Business-to-business advice and assistance for the arboricultural industry:

- For achieving compliance and award of Arboricultural Association approved contractor status
- For developing efficient and ergonomic business systems
- For developing efficient and intuitive financial reporting and management systems

All of the 3 service offerings improve businesses and generate increased growth in revenues, profits and in professionalism

Development and Construction: we are a 'single-point of contact' for all tree-related requirements; from design/pre-planning to post-handover

Visit our website at www.thesussextreecompany.co.uk for a comprehensive overview

Abbots Lawn, Sylvan Way, Bognor Regis, PO21 2RS