UPVC FLUSH CASEMENT WINDOWS & DOORS

CROSS SECTIONS, DESIGN DETAILS & SPECIFICATIONS

NEW! Slimmer Sash Profile & Slimmer Astragal Bar

VERSION 2.0 (OCTOBER 2020)

A DESIGN GUIDE FOR SPECIFIERS AND CONSERVATION OFFICERS

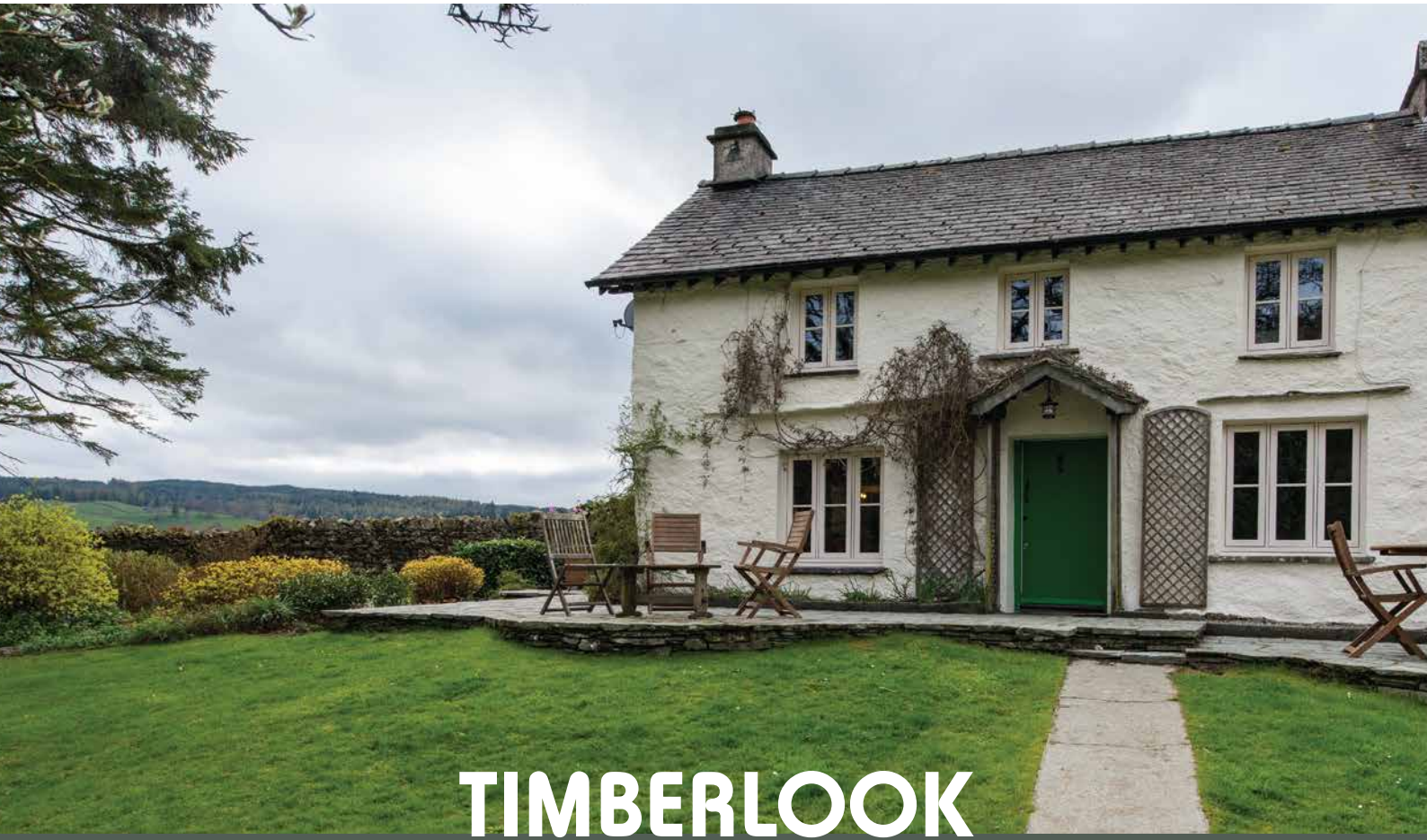

TIMBERLOOK
FLUSH SASH
HERITAGE WINDOWS

www.timberlook.com

ARUN DISTRICT COUNCIL BR/38/21/DOC

The Timberlook Design Guide is intended for use by specifiers and conservation officers. It contains cross section drawings and technical information that help designers and buyers to better understand the dimensions and details that create the Heritage Flush Sash Window.

Timberlook windows have been specifically designed with a slimmer sash profile that mimics heritage timber frame sections. It features the traditional chamfer on the outside, with a fully sculptured ovolo detail internally.

Great care has been taken in choosing authentic ancilliary details, including slim external astragal glazing bars, an optional deeper bottom sash rail, and an optional deeper cill design - The Radlington - which copies the style of a timber 'block' cill.

All window frames are mechanically joined, with a 'butt-joint' appearance on the sash, the transom, mullions, and outer frame - This detail finalises the Heritage Flush Sash, creating the authentic look of a traditional timber window frame.

Opening Sash and Outer Frame - Applies to head, cill and both sides

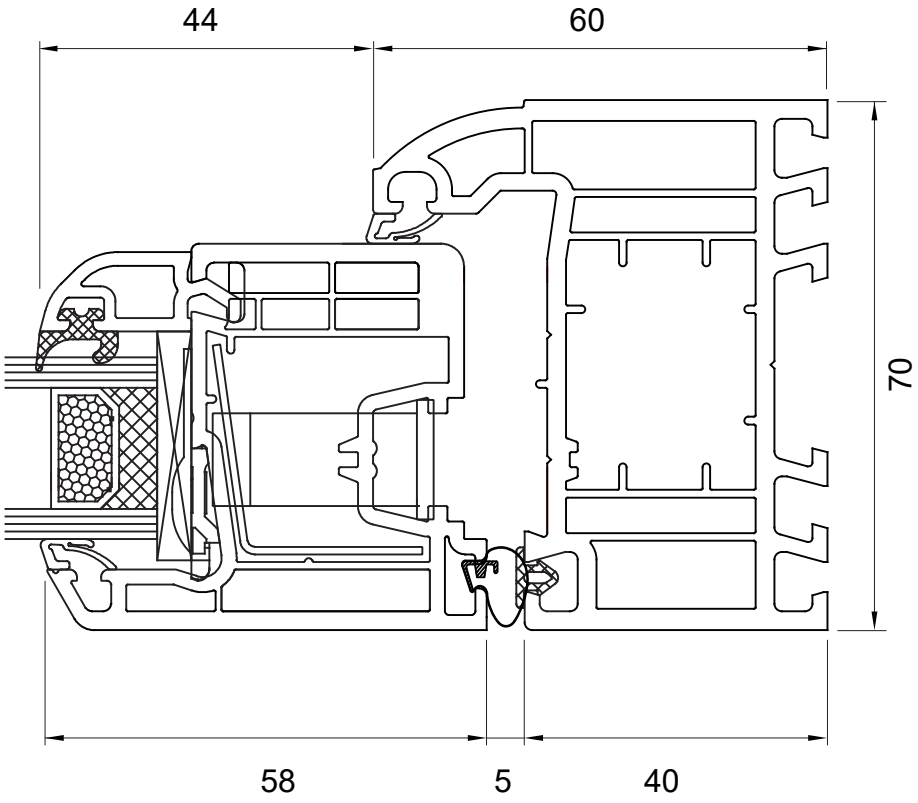

Transom and Mullion

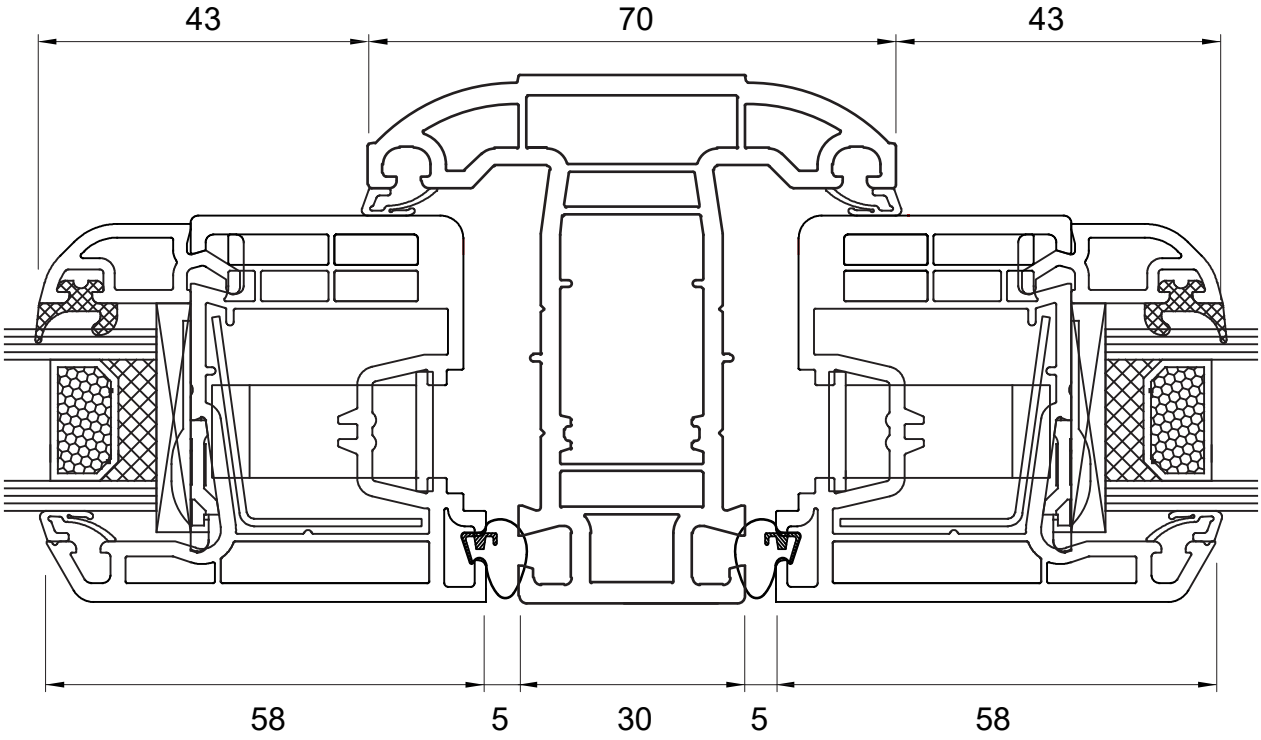

External Cills

Stub 85mm, 150mm, or 180mm

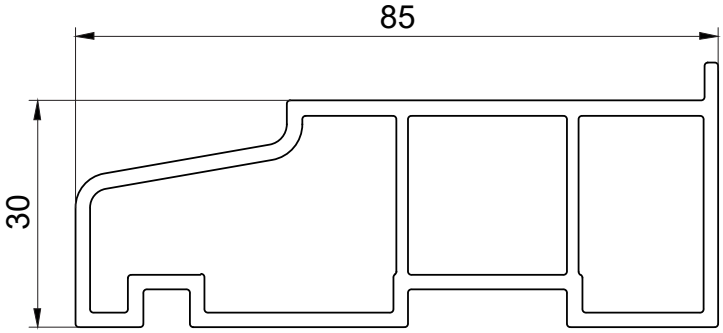

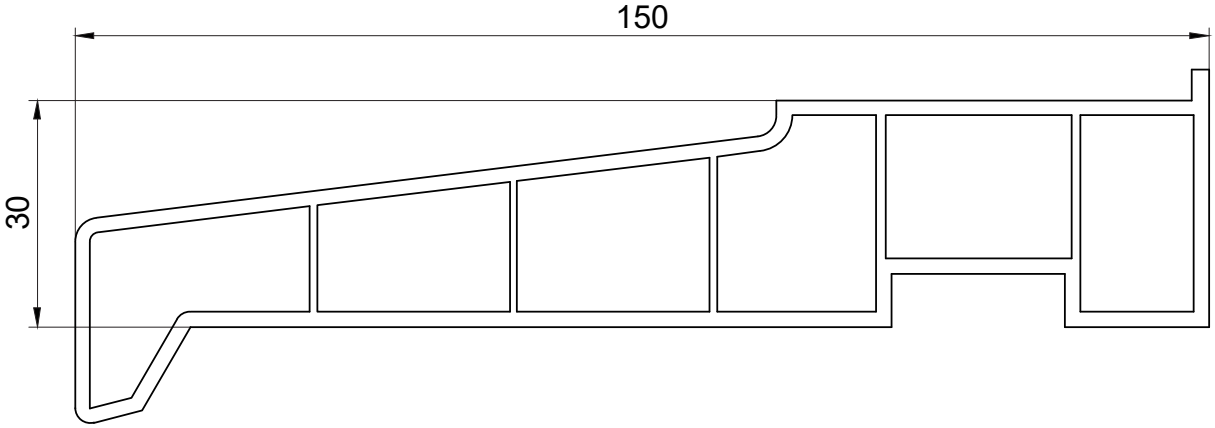

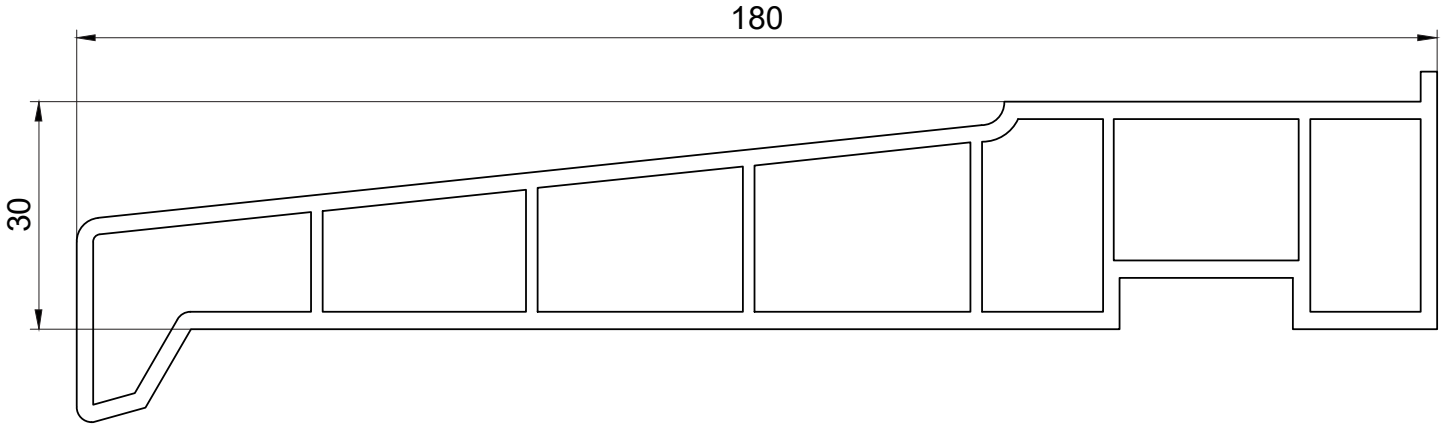

Glazing / Astragal Bar Detail

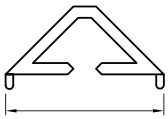

21mm External Glazing Bar
Chamfered Georgian Style

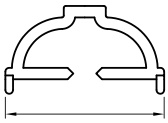

21mm Internal Glazing Bar
Matches Internal Frame Detail

The Radlington Cill - Optional Addition

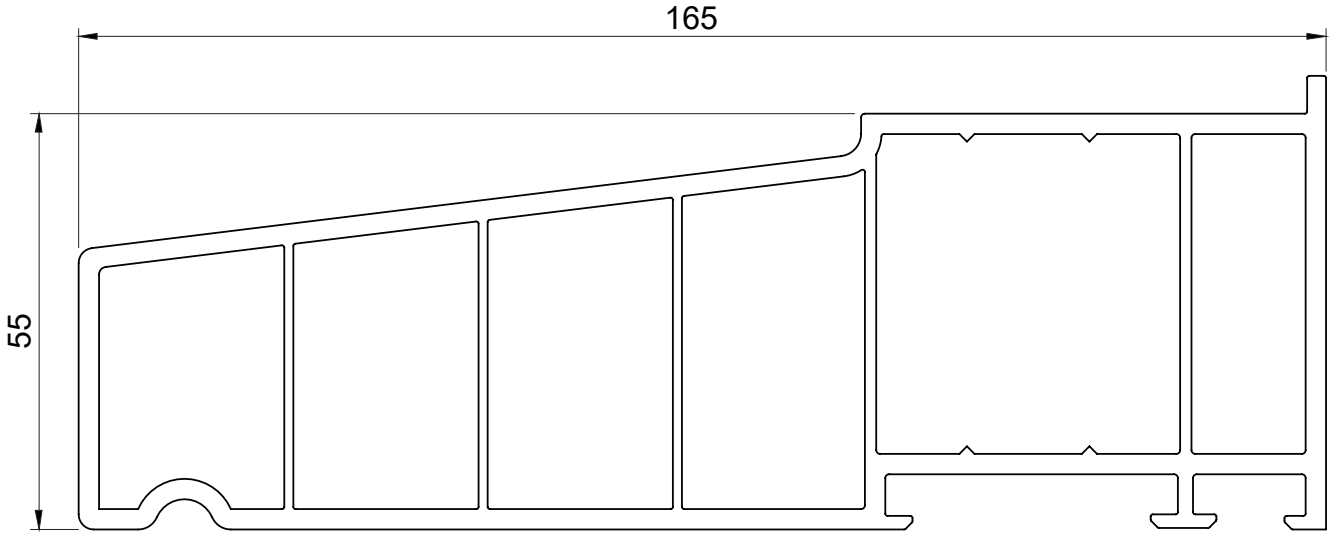

The Radlington Cill is a modern interpretation of the timber cills found on older wooden windows. It is a deeper nosed cill with a height of 55mm and represents a superior aesthetic upgrade over standard cill options. It is an optional extra and The Radlington must be specified when seeking a project estimate.

Deep Bottom Rail - Optional Addition

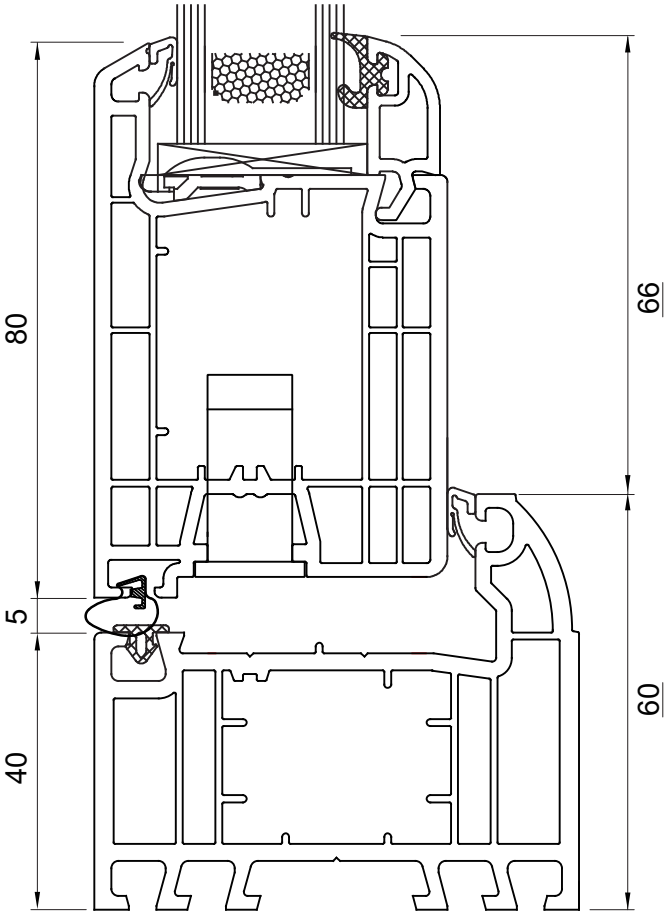

Concealed Trickle Ventilation - Optional Addition

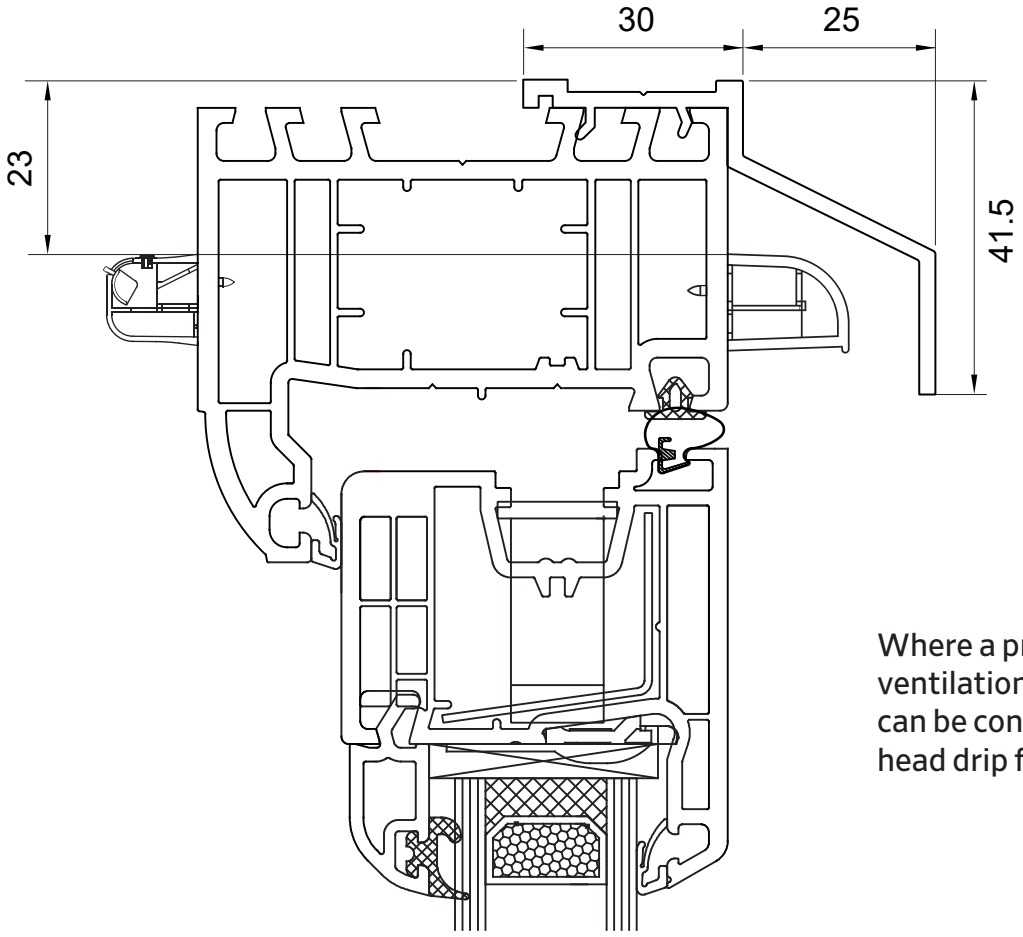

Where a project requires trickle ventilation, external vent covers can be concealed with an additional head drip for the outerframe.

Document Q and PAS 24

Timberlook windows can be specified to the latest **Document Q standards** and have also passed independent testing to gain **PAS24 certification**.

BFRC Rating kWh/(m^2·yr)	Label index	EWER Rating Scale	Window Rating
≥10	2	A+	A
0 to <10 ⇦		⇨ A ⇦	
-10 to <0		B	
-20 to <-10		C	
-30 to <-20		D	
-50 to <-30		E	
-70 to <-50		F	

BFRC Rating = 218.6g $_{window}$ - 68.5 x (U $_{window}$ + Effective L_{50}) =	1.79
Climate zone is:	UK

Thermal transmittance, W/(m^2·K)	**U $_{window}$**	**1.4**
Solar factor	**g $_{window}$**	0.45
Window air leakage heat loss, W/(m^2·K)	**L $_{factor}$**	0.01

Windows that require uprated glass and hardware must be specified on order.

Colours & Finishes

Timberlook windows can be manufactured in a range of standard colours & woodgrain foils. You can also choose an alternate colour inside and out.

Lead times vary for different combinations. This matrix shows indicative timescales based on a given finish.

COLOUR INSIDE \ COLOUR OUTSIDE	White	Polar White	Black Foil	Irish Oak	Anthracite Foil	Anthracite Smooth	Chartwell Green	Cream Foil	Rosewood	Painswick	Golden Oak
White	S	E	S	E	S	E	E	S	S	S	S
Polar White	n/a	S	E	E	E	E	E	E	E	E	E
Black Foil	n/a	n/a	E	n/a	n/a	n/a	n/a	n/a	n/a	n/a	n/a
Irish Oak	n/a	n/a	n/a	E	n/a	n/a	n/a	n/a	n/a	n/a	n/a
Anthracite Foil	n/a	n/a	n/a	n/a	E	n/a	n/a	n/a	n/a	n/a	n/a
Anthracite Smooth	n/a	n/a	n/a	n/a	n/a	E	n/a	n/a	n/a	n/a	n/a
Chartwell Green	n/a	n/a	n/a	n/a	n/a	n/a	E	n/a	n/a	n/a	n/a
Cream Foil	n/a	n/a	n/a	n/a	n/a	n/a	n/a	S	n/a	n/a	n/a
Rosewood	n/a	n/a	n/a	n/a	n/a	n/a	n/a	n/a	S	n/a	n/a
Painswick	n/a	n/a	n/a	n/a	n/a	n/a	n/a	n/a	n/a	E	n/a
Golden Oak	n/a	n/a	n/a	n/a	n/a	n/a	n/a	n/a	n/a	n/a	S

S - STANDARD LEAD TIME

E - EXTENDED LEAD TIME

TIMBERLOOK
FLUSH SASH
HERITAGE WINDOWS

Timberlook Flush Sash Windows and Doors are an ideal choice for anybody undertaking renovation or conservation projects, new build homes, or simply replacing windows.

Timberlook is a uPVC window system that replicates traditional wooden windows, with authentic appearances and a 'butt joint' mortise and tenon look. It was developed for period, character, and historic projects, but is a suitable alternative for renovations & new build developments in conservation areas too.

Our energy-efficient and maintenance-free flush casement windows are designed for modern living. Timberlook can be specified to Document Q, and is certified to PAS24 with uprated glass and hardware. Installations are made faster, easier, and safer than with other flush systems - it has a 70mm frame depth and glass units are supplied separately.

www.timberlook.com