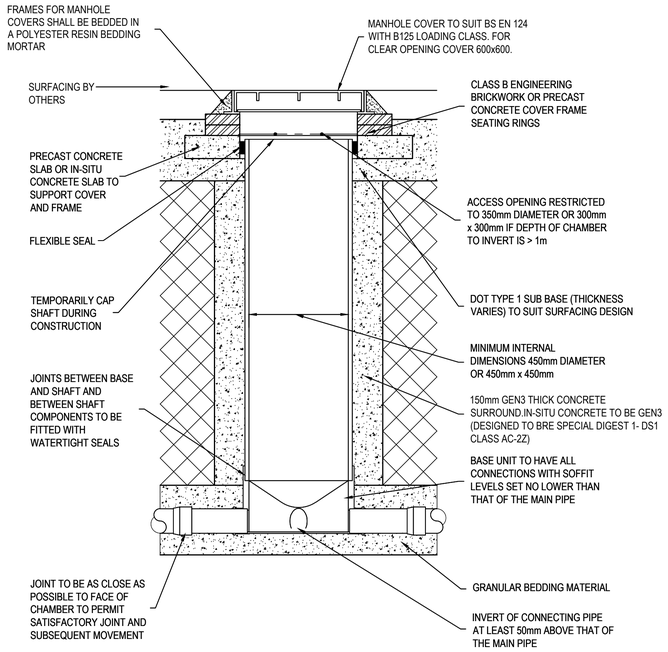

TYPICAL INSPECTION DETAIL - TYPE 3 (FLEXIBLE MATERIAL DETAIL)

MAXIMUM DEPTH FROM COVER LEVEL TO SOFFIT OF PIPE IN AREAS SUBJECT TO VEHICLE LOADING 3m, NON ENTRY

PLASTIC CHAMBERS AND RINGS SHALL COMPLY WITH BS EN 13598-1 AND BS EN 13598-2 OR HAVE EQUIVALENT INDEPENDENT APPROVAL

NOT TO SCALE

NOMINAL PIPE DIA.	ROCKER PIPE EFF. LENGTH (m)
150 - 600	0.6
675 - 750	1.0
825+	1.25

ROCKER PIPE LENGTHS

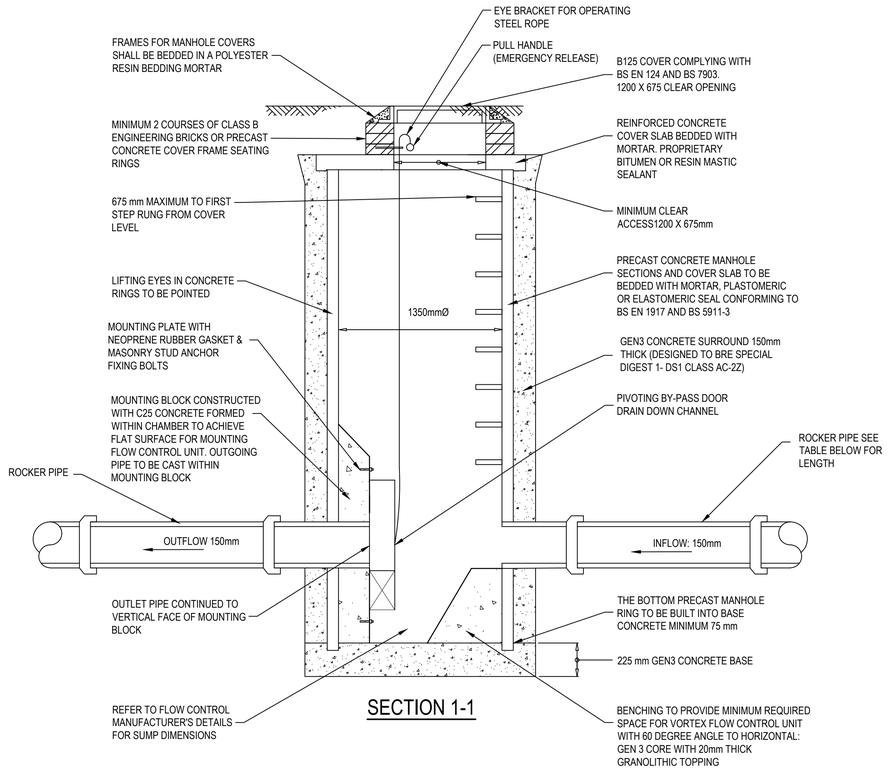

SECTION 1-1

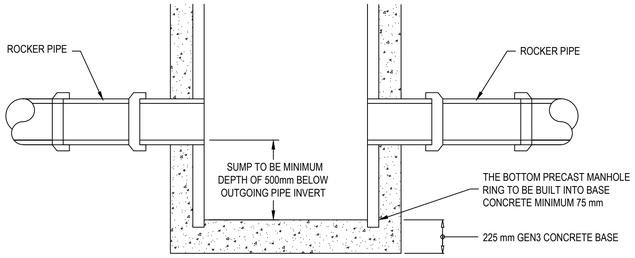

TYPICAL CATCHPIT DETAIL: APPLIES TO TYPE E

NOT TO SCALE

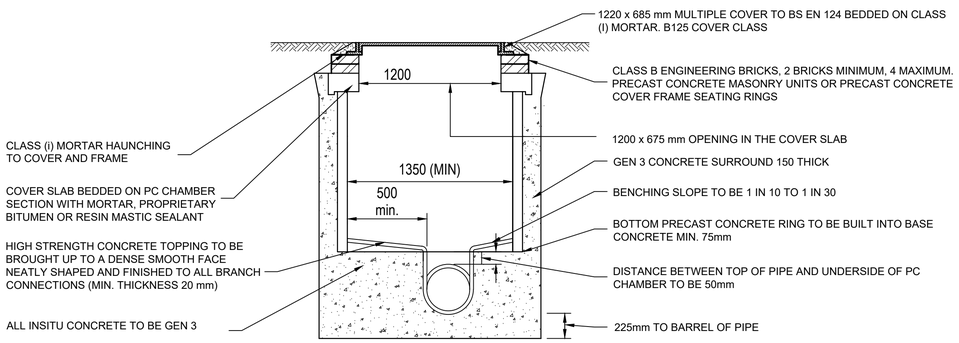

TYPICAL MANHOLE TYPE E

DEPTH OF SOFFIT 1.0 TO 1.45m

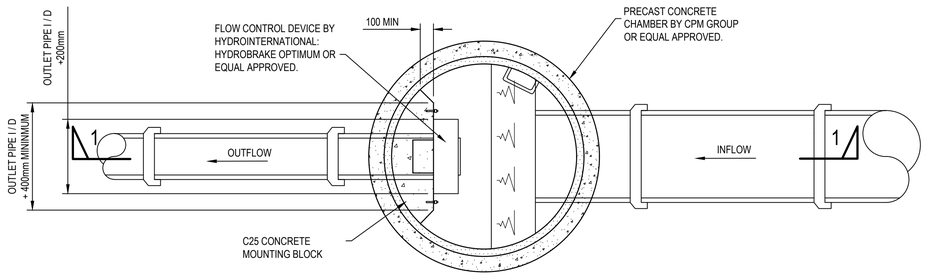

PLAN

TYPICAL MANHOLE WITH VORTEX FLOW CONTROL DETAIL

NOT TO SCALE

NOTES

1. ALL DIMENSIONS ARE IN MILLIMETRES UNLESS NOTED OTHERWISE.
2. ALL LEVELS ARE IN METRES ABOVE ORDNANCE DATUM UNLESS NOTED OTHERWISE.
3. ALL DIMENSIONS AND LEVELS SHALL BE CHECKED ON SITE PRIOR TO ANY WORKS BEING PUT IN HAND.
4. THIS DRAWING SHALL BE READ IN CONJUNCTION WITH ALL OTHER CONTRACT DRAWINGS AND RELEVANT STRUCTURAL SPECIFICATIONS.
5. ANY DISCREPANCIES BETWEEN THE INFORMATION GIVEN SHALL BE BROUGHT TO THE ATTENTION OF THE ENGINEER AS SOON AS POSSIBLE.
6. ALL MATERIALS USED IN THE WORKS SHALL BE TO BRITISH STANDARDS OR OTHER APPLICABLE SPECIFICATIONS.
7. ALL WORK IS TO BE CARRIED OUT TO B.S. CODES OF PRACTICE AND IN ACCORDANCE WITH GOOD WORKMANSHIP PRACTICE.
8. ALL PROPRIETARY MATERIALS USED IN THE WORKS SHALL BE USED IN COMPLETE ACCORDANCE WITH THE MANUFACTURERS RECOMMENDATIONS.
9. ALL BURIED, SURFACE AND OVERHEAD SERVICE INFORMATION CONTAINED WITHIN THIS DRAWING IS SHOWN INDICATIVELY. THE SERVICES SHOWN MAY NOT REPRESENT THE ENTIRETY OF ALL SERVICES THAT MAY BE ENCOUNTERED. ALL SOURCE INFORMATION SHOULD BE REFERRED TO PRIOR TO UNDERTAKING WORKS ON SITE. CROUCH WATERFALL ACCEPT NO RESPONSIBILITY FOR OMISSIONS OR ERRORS IN THE POSITIONING OF THE SERVICES PRESENT ON SITE. REFER TO ALL RELATED ENGINEERING DRAWINGS, FORMS AND SPECIFICATIONS FOR FURTHER INFORMATION. REFER TO THE RESIDUAL/DESIGNERS RISK ASSESSMENT FOR ACTIONS TO MINIMISE AND MITIGATE RISK ASSOCIATED WITH KNOWN AND UNKNOWN SERVICES ON SITE.

INFORMATION

REV	AMENDMENT	DRN	CHK	APP	DATE
B	AMENDED FOR LLFA COMMENT	RP	RP	MGB	29/01/2021
A	ISSUED FOR LLFA COMMENT	RP	RP	MGB	24/01/2021

Suite 5.01
Network House
Basing View
Basingstoke
RG21 4HG

Tel 01256 479203
office@crouchwaterfall.co.uk

CROUCH WATERFALL

CLIENT

BOURNE LEISURE

PROJECT TITLE

BUTLINS BOGNOR TEMPORARY VENUE

DRAWING TITLE

DRAINAGE DETAILS SHEET 1

DRAWN	CHK	APP	DATE	SCALE
RP	RP	MGB	JAN 2021	NOT TO SCALE

JOB NUMBER	DRAWING NUMBER	REVISION
20074	511	B

ARUN DISTRICT COUNCIL BR-0502/20/PL