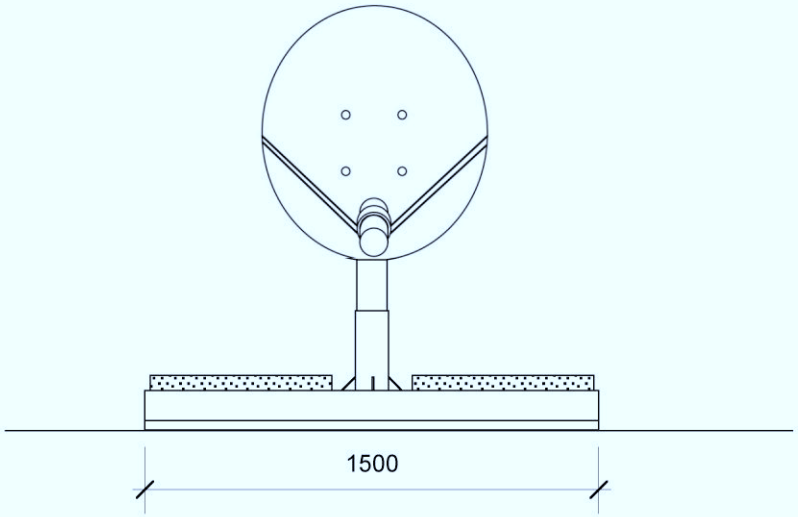

Front View

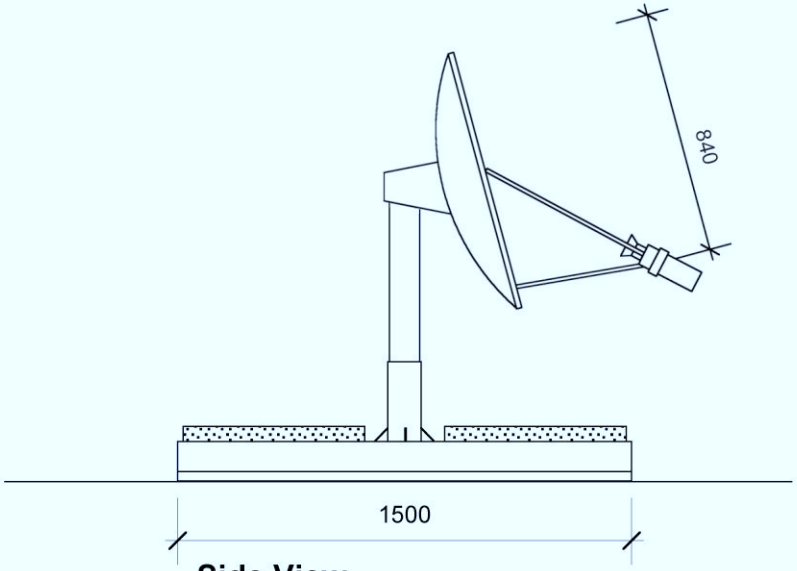

Side View

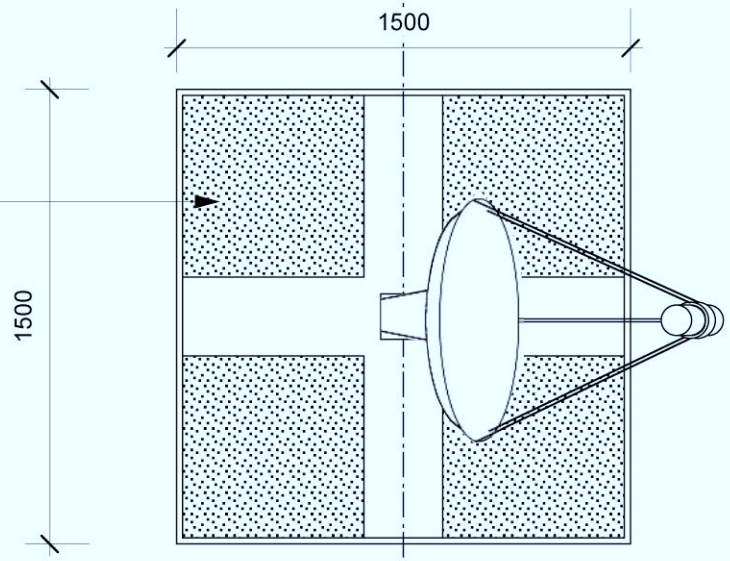

Flat roof frame has 4
concrete slabs for ballust

Top View

THE ANTENNA ARE WHITE IN
COLOUR ALUMINIUM/ALLOY
CONSTRUCTION WITH
GALVANISED STEEL BRACKETRY

840mm Dia - SATELLITE DISH ON FLAT ROOF - PLAN No. SIS 2

Scale 1:25