ARUN DISTRICT COUNCIL BN/78/23/DOC

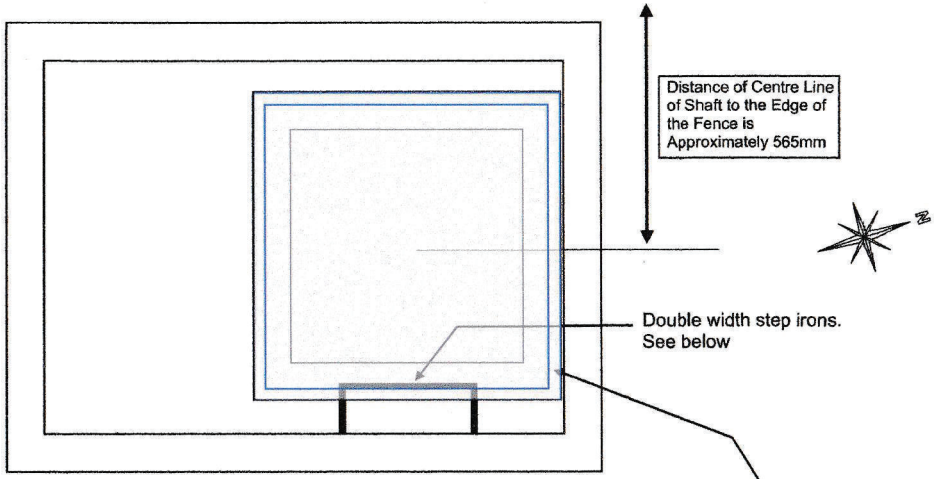

Culvert Inspection Chamber IC#2 – (South) – Scale 1 : 100

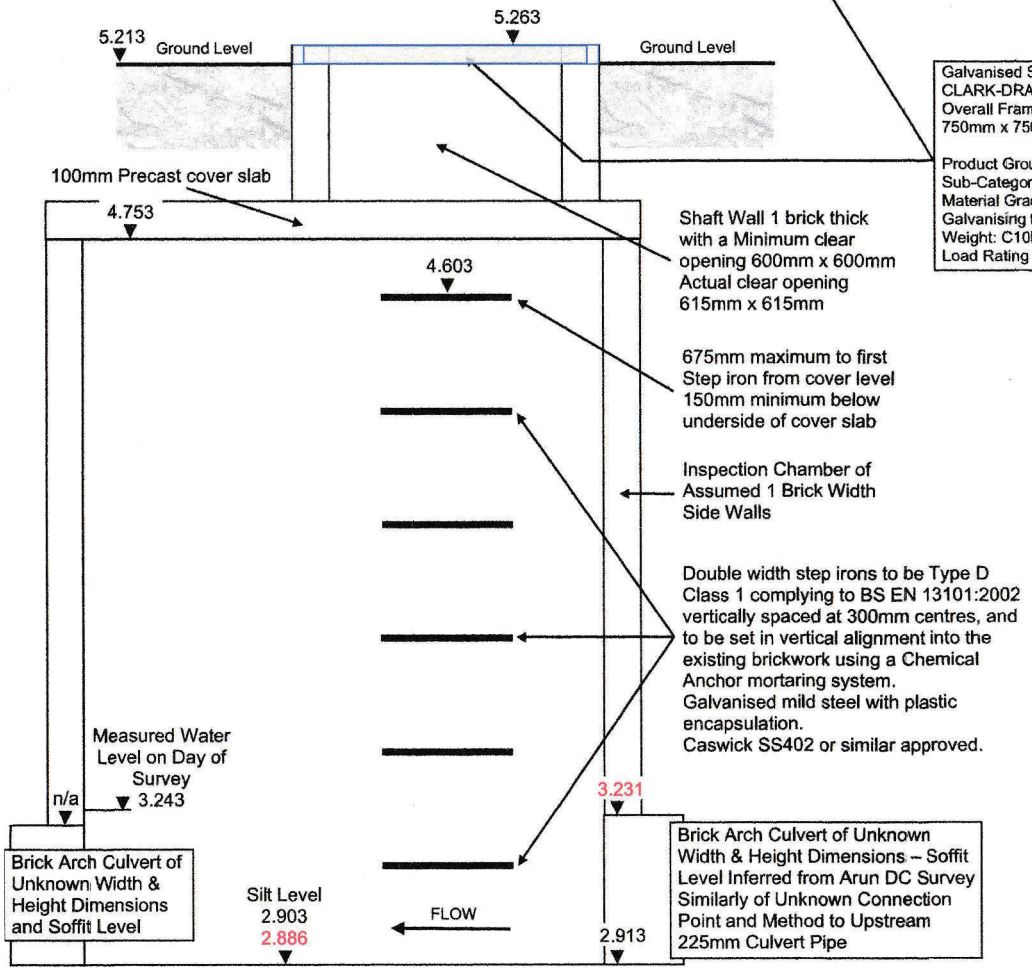

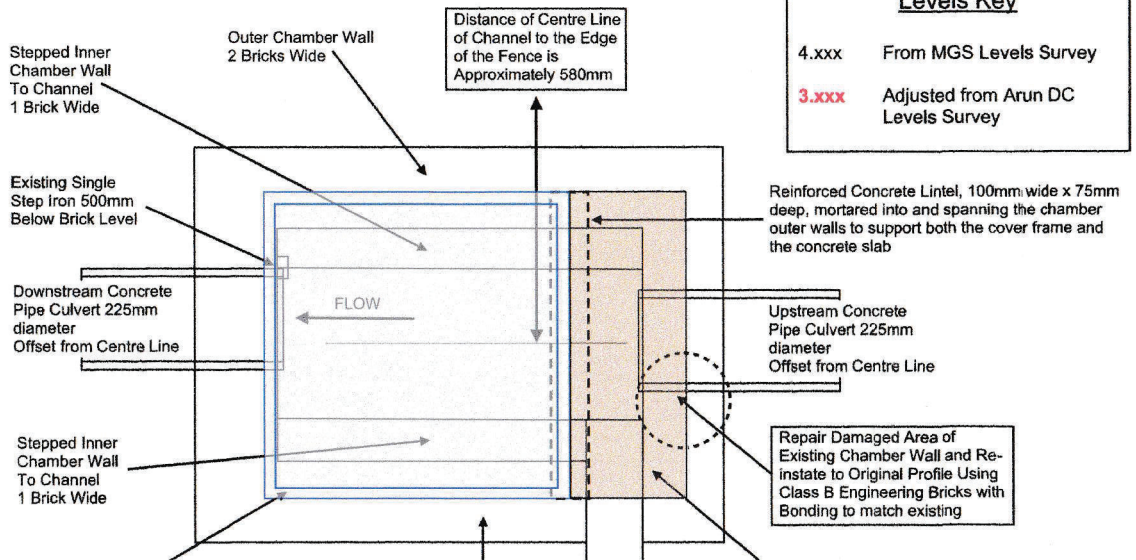

Culvert Inspection Chamber IC#1 – (North) – Scale 1 : 100

Levels Key

4.xxx	From MGS Levels Survey
3.xxx	Adjusted from Arun DC Levels Survey

Mate GeoTechnic Services

Rev.	Description	Drn.	Date
01	Original	RC	26-04-23

Project: Proposed New Build :-
33 Hill Lane
Barnham
PO22 0BL

Client: Ms Sara Billingshurst
Drawing Title: Culvert & Fence Constructional Details

This drawing is copyright. It may not be copied or reproduced without written consent.

Scale: As Shown
Drawing Original: A2
Drawing Number: MGS – BN/56/20 – rev01