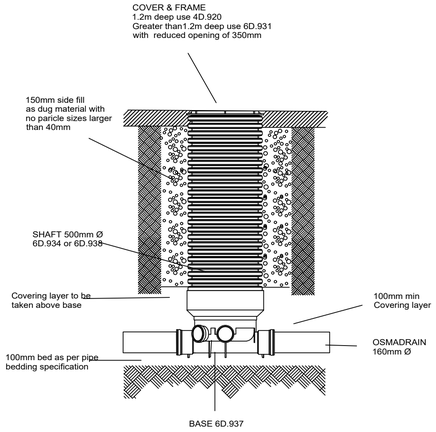

Alternative cover arrangement for loadings greater than 5 tonnes-

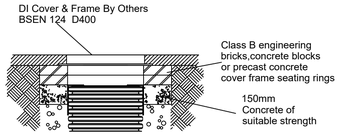

NON ENTRY INSPECTION CHAMBER WITH 6D.937 BASE

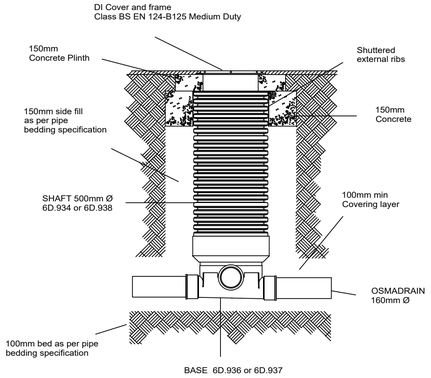

OSMADRAIN N I C WITH MEDIUM DUTY COVER & FRAME

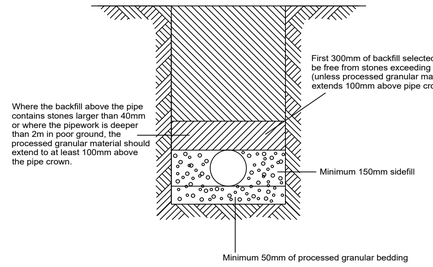

Please note-

In the case of 110mm/160mm OsmaDrain and 150mm Osma UltraRib pipes, where the trench material can be hand trimmed by shovel and is not puddled when walked upon, a 50mm depth of bedding material may be used. In this case the material must be nominal 10mm single-sized aggregate.

OSMADRAIN PIPE LAID ON 50MM MINIMUM PROCESSED GRANULAR MATERIAL

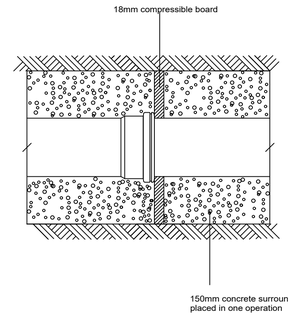

PIPE PROTECTION CONCRETE SURROUND

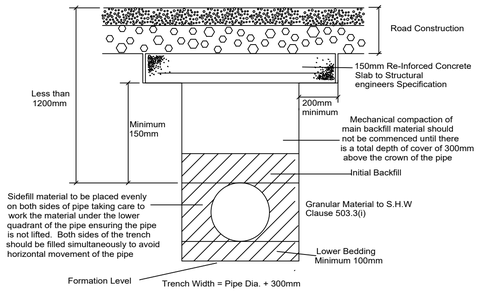

PIPE PROTECTION CONCRETE SLAB

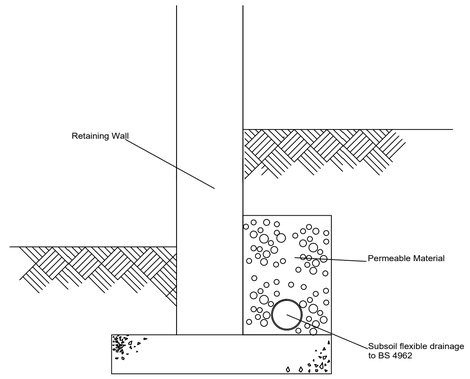

SUBSOIL DRAINAGE BEHIND RETAINING WALL

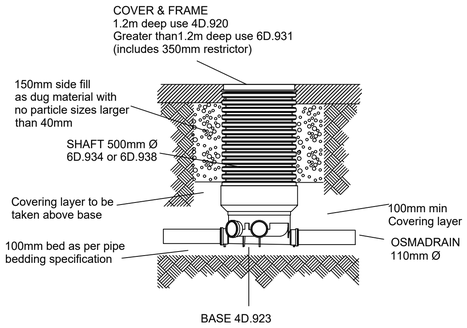

Alternative cover arrangement for loadings greater than 5 tonnes-

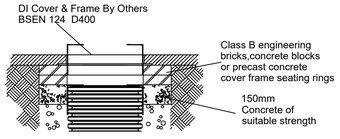

NON ENTRY INSPECTION CHAMBER WITH 4D.923 BASE

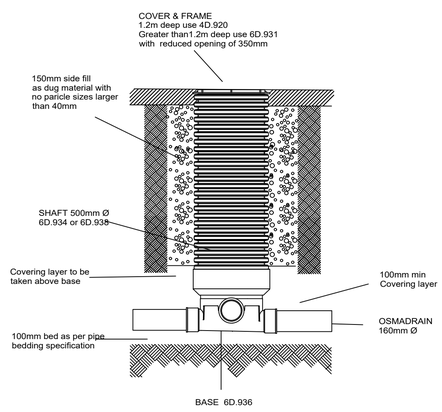

Alternative cover arrangement for loadings greater than 5 tonnes-

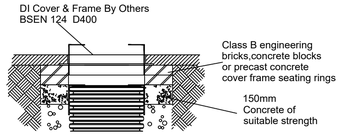

NON ENTRY INSPECTION CHAMBER WITH 6D.936 BASE

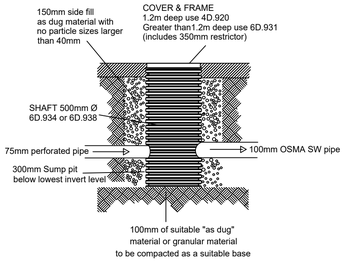

SILT TRAP DETAIL FOR USE IN LANDSCAPED AREAS

The Contractor is to check and verify in conjunction with the Architects details all setting out points, building and site dimensions, levels and sewer invert levels at connection points and ensure that they are fully conversant with the contents and requirements of the site investigation report before work starts. The Contractor is to comply in all respects with current building legislation, British Standard Specifications, Building Regulations etc.,whether or not specifically stated on this drawing.

This drawing is not intended to show details of ground conditions or ground contaminants. Each area of ground relied upon to support any structure depicted (including drainage) must be investigated by the Contractor any areas of formation for said structures which do not accord with the anticipated conditions as described in the site investigation report are to be immediately notified to the Engineer, where applicable. Any suspect fluid ground or ground contaminants on or within the ground should be further investigated by a suitable expert. Any earthworks shown indicate typical slopes for guidance only and should be investigated further by a suitable geotechnical expert.

Where existing trees are shown to be retained they should be subject to a full Arboricultural inspection for safety. All trees are to be planted so as to ensure they are a minimum of 5 metres from buildings and 3 metres from drainage and services, where applicable. A foundation is to be provided to accommodate the proposed tree planting, where applicable.

© This drawing and the building works depicted are the copyright of Banners Gate Ltd and may not be reproduced or amended except by written permission. No liability will be accepted for amendments made by other persons.

GENERAL NOTES

1. This drawing is to be read in conjunction with relevant architectural and engineering drawings.

2. Levels of the existing road at the point of tie-in with proposed site road must be checked prior to commencement of works.

3. Any discrepancies between the details shown and actual on site conditions to be reported immediately to the engineer prior to commencement of works.

wavin
OsmaDrain

STANDARD DETAILS

FOR CONSTRUCTION

Alternative products may be used

Rev.	Description	Date	By
A	Drawing updated to For Construction.	14.06.17	JE
-	First Issue	23.05.17	TB

Client

REDROW

Project

Barnham
Phase 2

Title

Private Drainage Construction Details
Sheet 1 of 3

BANNERS GATE
CIVIL, STRUCTURAL & ARCHITECTURAL DESIGN SERVICES
10-11 Birmingham Street, Halesowen, West Midlands B63 3HN
Tel: 0121 687 1500 Fax: 0121 687 1501
E-mail: mail@bannersgate.com

Scale	NTS	Drawn	DA
Date	May 2017	Checked	JB
File	17071/dwgs/civils	Drawing	17071/323A

ARUN DISTRICT COUNCIL BNG9/18/DOC