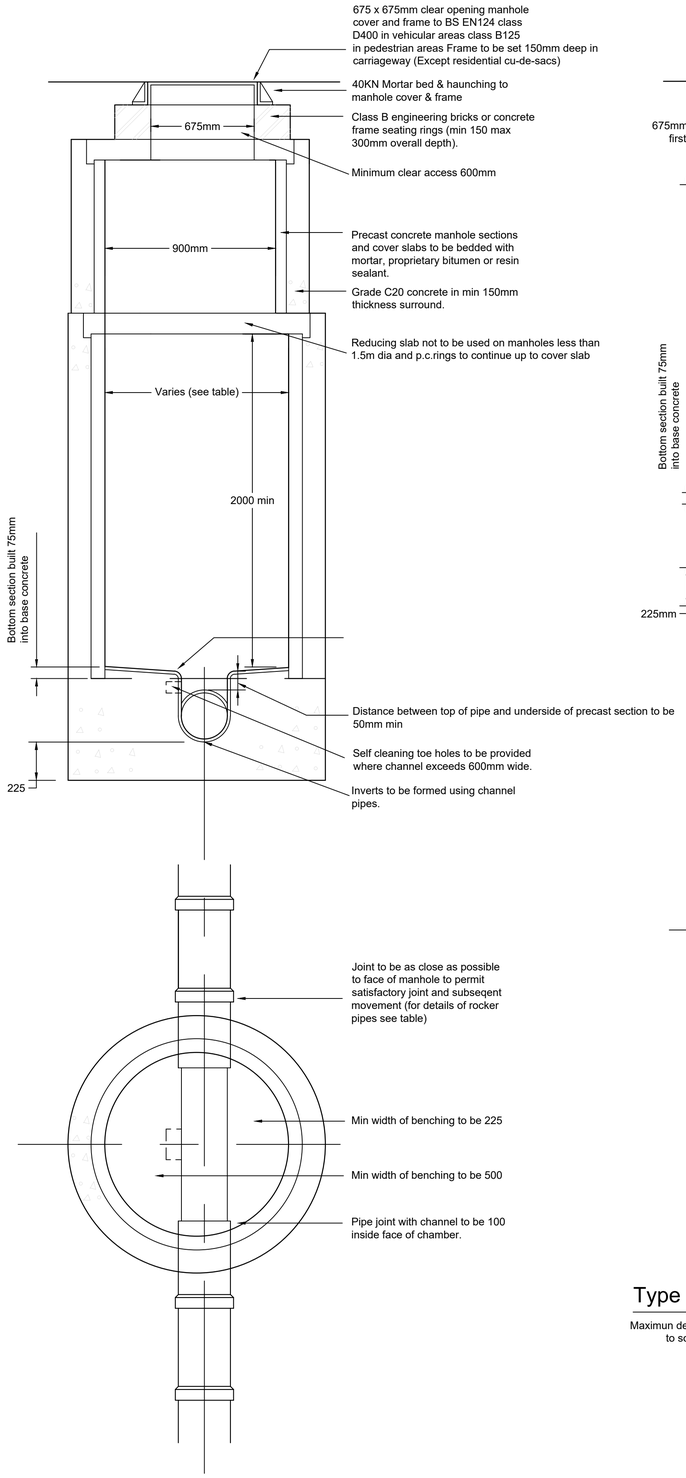

Type A Manhole

Depth from ground level to soffit of pipe 3m to 6m

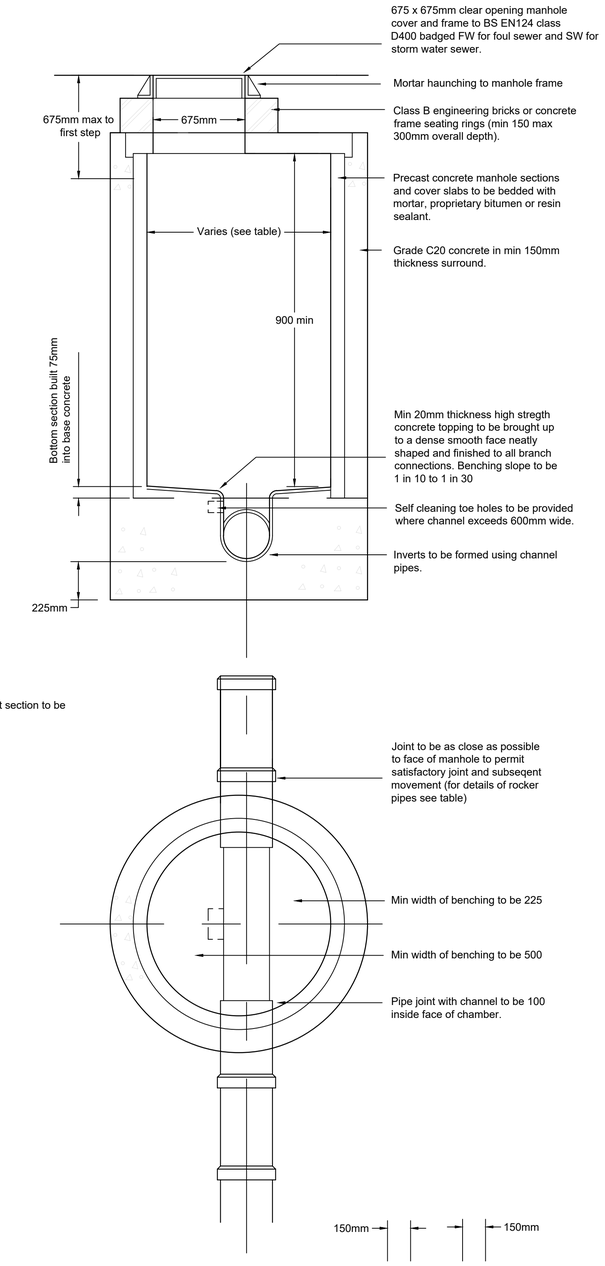

Type B Manhole

Maximun depth from ground level to soffit of pipe 3m

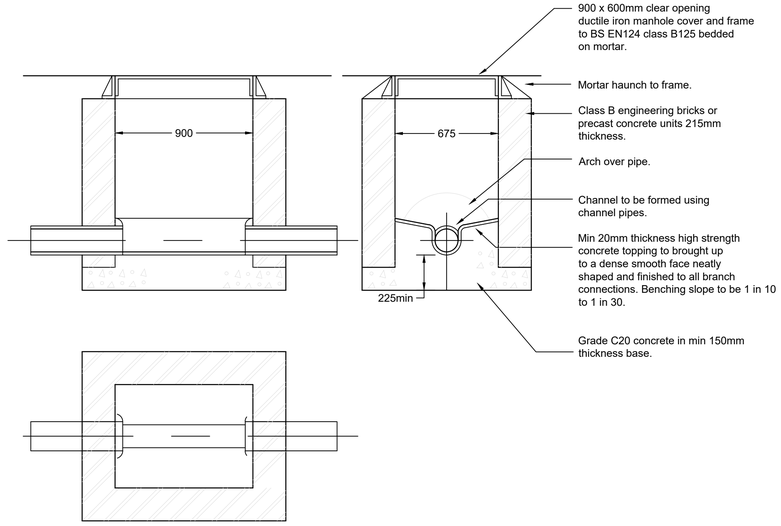

Type D Manhole

Depth from ground level to soffit of pipe less trhan 1.0m

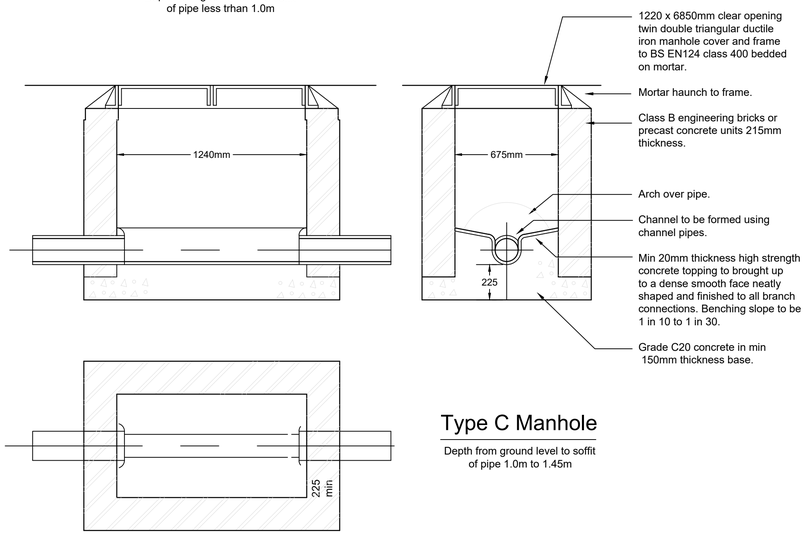

Type C Manhole

Depth from ground level to soffit of pipe 1.0m to 1.45m

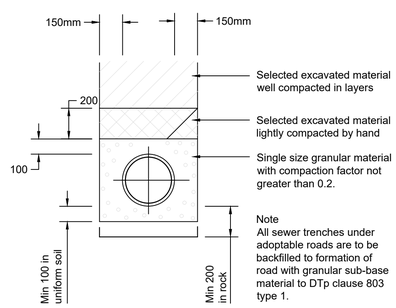

Class S Bedding

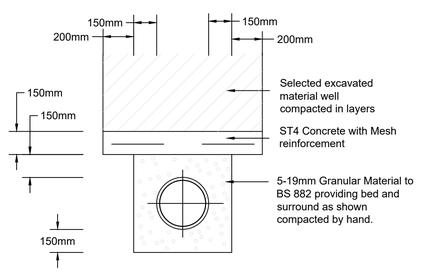

Concrete Protection

Option A

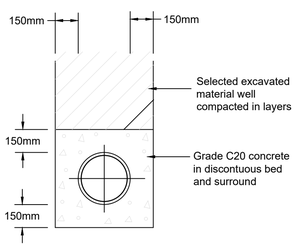

Concrete Protection

Option B

Concrete protection shall be interupted at each pipe joint by shaped compressible filler

The Contractor is to check and verify in conjunction with the Architects details all setting out points, building and site dimensions, levels and sewer invert levels at connection points and ensure that they are fully conversant with the contents and requirements of the site investigation report before work starts. The Contractor is to comply in all respects with current building legislation, British Standard Specifications, Building Regulations etc.,whether or not specifically stated on this drawing.

This drawing is not intended to show details of ground conditions or ground contaminants. Each area of ground relied upon to support any structure depicted (including drainage) must be investigated by the Contractor any areas of formation for said structures which do not accord with the anticipated conditions as described in the site investigation report are to be immediately notified to the Engineer, where applicable. Any suspect fluid ground or ground contaminants on or within the ground should be further investigated by a suitable expert. Any earthworks shown indicate typical slopes for guidance only and should be investigated further by a suitable geotechnical expert.

Where existing trees are shown to be retained they should be subject to a full Arboricultural inspection for safety. All trees are to be planted so as to ensure they are a minimum of 5 metres from buildings and 3 metres from drainage and services, where applicable. A foundation is to be provided to accommodate the proposed tree planting, where applicable.

© This drawing and the building works depicted are the copyright of Banners Gate Ltd and may not be reproduced or amended except by written permission. No liability will be accepted for amendments made by other persons.

GENERAL NOTES

1. This drawing is to be read in conjunction with relevant architectural and engineering drawings.

2. All sewerage offered for adoption under Section 104 of the Water Industry Act 1991 is to be constructed in accordance with Sewers for Adoption 6th Edition and Southern Water Addendum.

ADOPTABLE ROADS AND SEWERS

1. All pipes to be used in adoptable sewerage shall be either clayware to BS EN 295 or concrete to BS EN 1916 and BS 5911: Part 1 with Class S bedding unless otherwise stated. With approval of the Adopting Authority solid wall concentric external rib reinforced uPVC pipes complying with the relevant provisions of BS EN 13476 may be used.

2. Where cover to a pipe is more than 1200mm under adoptable carriageway the trench shall be filled to formation of the carriageway with well compacted DTp Type 1 material.

3. Where cover to a pipe is less than 1200mm under adoptable carriageway it shall be provided with concrete protection in accordance with the specification of the adopting authority and back filled to formation of the carriageway with well compacted DTp Type 1 material. Where concrete bed and surround is specified flexibility of joints is to be maintained by using compressible bitumen impregnated fibreboard at each pipe joint.

4. All existing drainage invert levels, diameters and locations are to be checked by the Contractor prior to the commencement of any proposed drainage work. Any difference between actual and drawn details is to be reported to the Engineer immediately.

5. All cement used in sewerage is to be sulphate resisting.

Diameters of manholes

Diameter of largest pipe in manhole (mm)	Internal diameter of manhole (mm)
Less than 375	1200
375-700	1500
750-900	1800
Greater than 900	Consult Undertaker

Rocker Pipes

Pipe diameter (mm)	Effective length (m)
150-600	0.60m
601-750	1.00m
750 and over	1.25m

FOR CONSTRUCTION

Please note whilst these drawings may be used for tender purposes, drawings are subject to client approval as part of ongoing consultations and design check. Amendments may therefore be requested.

Rev.	Description	Date	By
A	Drawing updated to For Construction.	14.06.17	JE
-	First issue.	19.05.17	DA

Client

REDROW

Project

Barnham
Phase 2

Title

Infrastructure Drainage Construction Details

BANNERS GATE
CIVIL, STRUCTURAL & ARCHITECTURAL DESIGN SERVICES
10-11 Birmingham Street, Halesowen, West Midlands B63 3HN
Tel: 0121 687 1500 Fax: 0121 687 1501
E-mail: mail@bannersgate.com

Scale	Not To Scale	Drawn	DA
Date	May 2017	Checked	JB
File	17071/dwgs/civils/current	Drawing	17071/311 A

ARUN DISTRICT COUNCIL BNDESIGDOC