DESIGN NOTES

1. STORAGE DESIGN BASED ON 1 IN 100 YR STORM + 40%.

2. DRAIN POINTS AND LOCATIONS TO BE CONFIRMED BY ARCHITECT.

3. CONTRACTOR TO ESTABLISH LOCATIONS OF ALL EXISTING SERVICES PRIOR TO COMMENCING.

4. EXISTING TREES TO BE PROTECTED WHERE EXCAVATIONS RUN CLOSE.

5. DESIGN SUBJECT TO APPROVAL FROM SOUTHERN WATER FOR CONNECTIONS TO SEWERS AND ADOPTION OF SEWERS.

6. DESIGN SUBJECT TO APPROVAL FROM WSCC FOR ADOPTABLE ROADS AND DRAINAGE.

7. DESIGN SUBJECT TO APPROVAL FROM WSCC.

8. DISCHARGE TO EXISTING WATER COURSE SUBJECT TO ORDINARY WATERCOURSE CONSENT FROM WSCC.

ABBREVIATIONS

D307.0	DETAIL NUMBER - SEE DRAINAGE DETAIL SHEET
FD	FOUL DRAIN
SWD	SURFACE WATER DRAIN
FWS	ADOPTABLE FOUL WATER SEWER
SWS	ADOPTABLE SURFACE WATER SEWER
MH	MANHOLE
IC	INSPECTION CHAMBER
SA	SOAKAWAY
FIC	450mm DIA. FOUL INSPECTION CHAMBER - D202.6
SIC	450mm DIA. SURFACE WATER INSPECTION CHAMBER - D202.6
FAC	300mm DIA. FOUL ACCESS CHAMBER - D202.18
SAC	300mm DIA. SURFACE WATER ACCESS CHAMBER - D202.18
CI	CAST IRON
VC	VITRIFIED CLAY
CONC	CONCRETE
PVC-U	POLYVINYL CHLORIDE - UNPLASTICISED
G	SMALL GULLY - D209.0
YG	YARD GULLY - D209.2
RG	ROAD GULLY - D208.1
CPG	CAR PARK GULLY - D208.2
DP	BELOW GROUND DRAIN POINT
SVP	SOIL VENT PIPE DROP
EP	EXTERNAL ROD/DRAIN POINT - D213.1
DT	SURFACE WATER DISTRIBUTION TANK
FFL	FINISHED FLOOR LEVEL
SSL	STRUCTURAL SLAB LEVEL
GL	GROUND LEVEL
CL	COVER LEVEL
IL	INVERT LEVEL
SL	SUMP LEVEL
BL	BASE LEVEL
HL	HIGH LEVEL
BD	BACKDROP
CBS	CONCRETE BED & SURROUND
CLASS S	GRANULAR BED & SURROUND
CLASS B	GRANULAR BED

SURFACE WATER MANHOLE SCHEDULE

MH Ref	Eastings	Northings	Size	CL	IL	SL	Depth to B/SL	Depth to soffit	Type	Cover
S2	496302.487	104088.103	1200 x 675mm	10.010	8.969		1.041	0.816	Type D	D400
S3	496297.881	104080.616	1240 x 675mm	10.150	8.917		1.233	1.008	Type C	D400
S4	496265.536	104090.693	1240 x 675mm	9.750	8.725		1.025	0.800	Type D	D400
S7	496256.302	104099.630	1240 x 750mm	9.645	8.662		0.983	0.683	Type D	D400
S11	496228.719	104047.118	1240 x 900mm	9.900	8.483		1.417	0.967	Type D	D400
S12	496219.350	104032.524	1240 x 900mm	9.710	8.440		1.270	0.820	Type D	D400
S13	496209.189	104014.473	1240 x 900mm	9.865	8.388		1.477	1.027	Type C	D400
S14	496201.121	103994.460	1240 x 900mm	9.980	8.335		1.645	1.195	Type C	D400
S16	496199.297	103972.196	1240 x 900mm	9.700	8.278		1.422	0.972	Type D	D400
S19	496268.807	103969.591	1240 x 900mm	9.800	8.106		1.694	1.244	Type C	D400
S32	496327.766	104039.659	1240 x 900mm	9.860	8.488		1.372	0.922	Type D	D400
S35	496312.143	103999.543	1240 x 900mm	10.059	8.373		1.686	1.236	Type C	D400
S36	496307.212	103986.243	1240 x 900mm	9.890	8.335		1.555	1.105	Type C	D400
S37	496304.658	103966.243	1240 x 900mm	9.660	8.281		1.379	0.929	Type D	D400
S40	496287.744	103966.675	1240 x 900mm	10.035	8.236		1.794	1.344	Type C	D400
SMH1	496295.046	104096.096	1200m Catchpit	9.500	7.296	7.296	2.204	1.979	D202.2r	B125
SMH2	496288.907	103943.281	1500mm Catchpit	9.300	7.966	7.266	2.034	1.109	D202.2r	B125
HWMHSA	496317.573	104120.425	1500mm Catchpit	9.225	7.960	7.510	1.715	0.815	D210.2	D400

FOUL MANHOLE SCHEDULE

MH	Eastings	Northings	Size	CL	IL	Depth to IL	Depth to soffit	Type	Cover
F2	496312.896	104111.172	1200mm	9.485	6.626	2.859	2.709	Type B	D400
F3	496297.943	104083.632	1200mm	10.100	6.834	3.266	3.116	Type B	D400
F4	496267.123	104082.975	1200mm	9.730	7.049	2.681	2.531	Type B	D400
F5	496257.726	104088.343	1200mm	9.657	7.119	2.538	2.388	Type B	D400
F6	496238.255	104057.084	1200mm	10.020	7.365	2.655	2.505	Type B	D400
F7	496217.172	104035.815	1200mm	9.715	7.616	2.099	1.949	Type B	D400
F8	496211.331	104016.092	1200mm	9.825	7.692	2.133	1.983	Type B	D400
F9	496202.949	103995.955	1200mm	10.000	7.837	2.163	2.013	Type B	D400
F10	496200.703	103974.272	1200mm	9.760	8.166	1.594	1.494	Type B	D400
F18	496207.509	104031.222	1200mm	9.614	7.830	1.784	1.634	Type B	D400
F19	496303.016	103971.890	1200mm	9.765	8.130	1.635	1.485	Type B	D400
F20	496305.171	103986.827	1200mm	9.885	7.878	2.007	1.857	Type B	D400
F21	496323.563	104035.043	1200mm	9.925	7.348	2.577	2.427	Type B	D400
F22	496329.752	104052.250	1200mm	9.734	7.226	2.508	2.358	Type B	D400
F23	496339.683	104060.688	1200mm	9.725	7.170	2.555	2.405	Type B	D400
F24	496317.456	104071.010	1200mm	9.885	7.064	2.821	2.671	Type B	D400

NOTE
All ditches on the site for which Redrow has riparian responsibility to be cleared/desilted to the satisfaction of the ADC drainage engineer

SPECIFICATION NOTES

1. ALL DRAINAGE SHALL BE CONSTRUCTED AND COMMISSIONED IN ACCORDANCE WITH BS EN 295 & BS EN752, BUILDING REGULATIONS DOC, H AND ANY PARTICULAR REQUIREMENTS OF THE BUILDING CONTROL OFFICER.

2. DRAIN BEDDING IS TO BE PROVIDED AS D200.0, D200.1 and D200.2 AS SHOWN ON THE DRAINAGE DETAILS SHEETS.

3. EFFECTIVE COVER IS THE MINIMUM DEPTH OF COVER OVER THE PIPE CROWN AT ANY TIME DURING THE CONSTRUCTION PROCESS.

4. ALL CONCRETE PIPEWORK, MANHOLES AND FITTINGS SHALL BE TO BS 5911 (ALL RELEVANT PARTS). ALL CONCRETE PIPEWORK TO BE TO HIGH STRENGTH

5. WHERE CONNECTIONS ARE TO BE MADE TO EXISTING MANHOLES/SEWERS, INVERT LEVELS, PIPE SIZES & ORIENTATION SHALL BE CHECKED PRIOR TO THE COMMENCEMENT OF THE WORKS AND ANY VARIANCE REPORTED TO THE ENGINEER IMMEDIATELY.

6. WHERE PIPELINES CROSS, EACH IS TO BE SURROUNDED WITH GRADE ST4 MASS CONCRETE FOR A DISTANCE NOT LESS THAN 1m CENTRED ON THE CROSSING POINT, LENGTH OF SURROUND TO BE EXTENDED AS NECESSARY TO WITHIN 150mm OF THE NEXT NEAREST FLEXIBLE JOINTS.

7. THE CONTRACTOR IS TO ENSURE THAT PROTECTIVE MEASURES ARE TAKEN TO ENSURE THAT DRAINAGE PIPEWORK AND FITTINGS ARE NOT DAMAGED BY SITE TRAFFIC PRIOR TO OVERSITE FILLING OPERATIONS BEING COMPLETED AROUND BUILDINGS.

8. ALL PRIVATE DRAINAGE PIPEWORK SHALL BE PVCu. ALL ADOPTED DRAINAGE TO BE VC. ALL UNDISTRIBUTING DRAINS TO BE LAID AT A GRADIENT OF 1:40

9. WHERE DRAINS PASS THROUGH FOUNDATIONS OR CONNECT TO MANHOLES, FLEXIBLE PIPE JOINTS ARE TO PROVIDED WITHIN 150mm OF THE FACE OF THE STRUCTURE AND WITHIN A FURTHER 600mm TO FORM A ROCKER PIPE.

10. WHERE PIPES PASS THROUGH SCREEN WALLS, FOOTINGS OR RETAINING WALLS, LINTELS ARE TO BE PROVIDED.

11. WHERE PIPELINES PASS WITHIN 1m OF BUILDINGS OR WALLS THE FOUNDATIONS ARE TO BE TAKEN DOWN BELOW THE BOTTOM OF THE TRENCH

12. 450mm DIA. INSPECTION CHAMBERS (FIC/SIC) MAY BE USED:
- WITH 350mm REDUCED OPENING WHERE THE DEPTH FROM COVER TO INVERT EXCEEDS 1000mm,

300mm DIA. POLYPROPYLENE ACCESS CHAMBERS (FAC/SAC) MAY BE USED
- WHERE THE DEPTH FROM COVER TO INVERT DOES NOT EXCEED 600mm AND WHERE THE PIPE SIZE DOES NOT EXCEED 100mm DIA.

13. STEEL COVERS WITHIN PROPERTY BOUNDARIES SHALL BE:
(UNLESS NOTED ON DRAWING OR MANHOLE SCHEDULE)
-ON PRIVATE DRIVEWAYS: FACTA GRADE B (BS EN ISO 1461: 1999)
-ON PRIVATE PATHWAYS, VERGES OR ON GARDENS: FACTA GRADE A (BS EN ISO 1461: 1999)

DUCTILE IRON COVERS OUTSIDE PROPERTY BOUNDARIES SHALL BE:
(UNLESS NOTED ON DRAWING OR MANHOLE SCHEDULE)
-ON ACCESS ROADS AND CAR PARKS: GRADE D400 (BS EN 124:1994)
-ON SHARED PATHWAYS, VERGES: GRADE A15 (BS EN 124:1994)

14. COVER LEVELS SHOWN 'CL' AND INVERT LEVELS SHOWN 'IL' ARE IN METRES ABOVE ORDNANCE DATUM.

15. ALL DRAINS TO BE 100mm DIAMETER UNLESS NOTED OTHERWISE

16. ALL DRAINS MARKED 'FWS' OR 'SWS' ARE PROPOSED ADOPTED SEWERS AND ARE TO BE CONSTRUCTED IN ACCORDANCE WITH 'SEWERS FOR ADOPTION, 7TH EDITION'

17. DRAINAGE CONNECTIONS NOT DIRECT TO A CHAMBER TO BE VIA AN OBLIQUE 45° JUNCTION

18. ALL CONNECTIONS INTO MANHOLES TO BE MADE SOFFIT TO SOFFIT UNLESS STATED OTHERWISE.

GENERAL NOTES:

1. All dimensions to be checked on site. All details and dimensions relating to sub-contractors or suppliers work must be checked and agreed between the sub-contractor or supplier and the main contractor.

2. This drawing is to be read in conjunction with all relevant architects, services and engineers drawings and specifications.

3. The location, size, depth and identification of existing services that may be shown or referred to on this drawing have been assessed from non intrusive observations , record drawings or the like. The contractor shall satisfy carry out intrusive investigations, trial holes or soundings prior to commencing work to satisfy himself that it is safe to proceed and that the assessments are accurate. Any discrepancies shall be notified to gsp prior to works commencing.

4. Tender or billing drawings shall not be used for construction or the ordering of materials.

5. Do not scale. All dimensions and levels to be site confirmed.

6. Copyright : This drawing must not be cooled, amended nor reproduced without the prior written agreement of gsp.

KEY

- Existing Ditch/watercourse
- Private surface water drain
- Private foul drain
- Adoptable foul sewer
- Adoptable highway drain/ SW sewer
- FIC — Foul Plastic Inspection Chamber - D202.6
- SIC — Surface Water Plastic Inspection Chamber - D202.6
- SCP — 5004 SEL Control chamber SUS503005 with orifice plate. Refer to plan for size.
- SAC — 300mm diameter Surface Water Access Chamber - D202.18
- FAC — 300mm diameter Foul Water Access Chamber - D202.18
- YG — Yard gully - 300ll x 600mm deep
- RG — Adoptable road gully
- RG — Private road gully
- F9 — Adoptable Foul water Sewer Manhole
- S13 — Adoptable Surface water manhole
- SVP — Foul drain point D307.0
- RP — Drain rodding point
- RWP — SW Drain point for RWP D203.5
- Drainage channel
- 300mm wide x 450mm deep gravel filled french drain
- Area of voided stone under permeable paving - refer to external works layouts for details
- DT — Distribution tank (inlet) from roof drainage in permeable paving sub-base. See detail on dig 2101
- DT — Distribution tank (Outfall) in permeable paving sub-base. See detail on dig 2101
- +6.000 — Proposed external levels

REV	DATE	DESCRIPTION	BY	CHK	APP
C3	17.09.20	Revised to WSCC comments	SDL	MR	GO
C2	26.08.20	Foul & surface water revisions	SDL	MR	GO
C1	25.08.20	CONSTRUCTION ISSUE	SDL	MR	GO
T3	06.08.20	Foul sewer route revised	SDL	MR	GO
T2	30.07.20	Revised to latest layout	SDL	MR	GO
T1	10.07.20	TENDER ISSUE	SDL	MR	GO
P5	18.06.20	Updated to latest layout	SDL	MR	GO
P4	21.02.20	Updated to Client comments	GS	SDL	GO
P3	31.01.20	Updated to client comments	CH	MR	
P2	23.12.19	Updated to latest scheme	HR	MB	
P1	06.11.18	INITIAL ISSUE	SL	MR	

Gyoury Self
CONSULTING ENGINEERS
16/17 BOUNDARY ROAD, HOVE, EAST SUSSEX BN3 4EF
TELEPHONE 01273 414413
E-MAIL: mail@gsphove.co.uk
Website: www.gyourysself.com
Also at Fareham and St Albans

CLIENT: REDROW HOMES
ARCHITECT: RHP
JOB TITLE: ANGEL & HYDE NURSERIES, YAPTON ROAD, BARNHAM
DRAWING TITLE: SITE DRAINAGE SHEET 2 OF 2

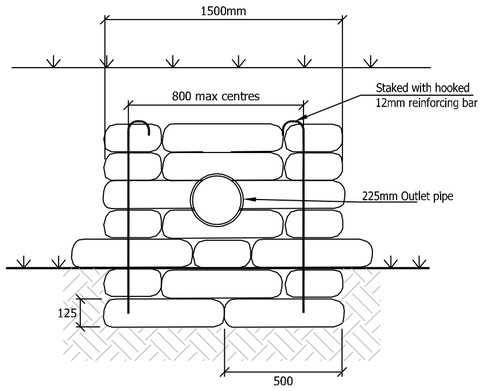
JOB No	SCALE @ A1	DATE
H19812	1/200	NOVEMBER 2019

DRAWN	ENGINEER	CHECKED	APP
MR	GTA		

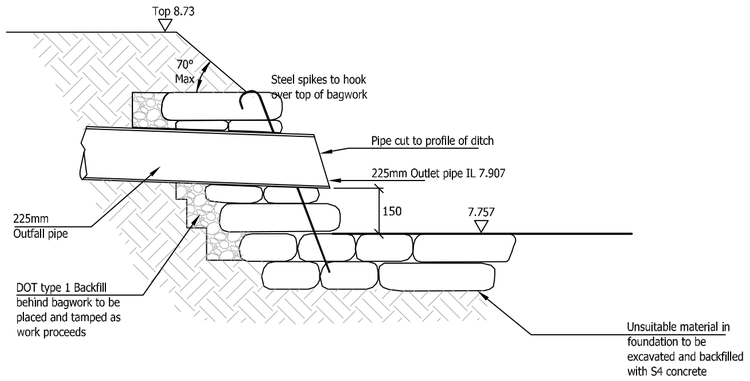
STATUS	DRAWING SUITABILITY
D1	SUITABLE FOR CONSTRUCTION

REVISION	ISSUE STATUS
C3	STAGE 5 – CONSTRUCTION

DRAWING No: 19812-CS-Z1-XX-DR-C-2061



ELEVATION OF HEADWALL



225mm DIA OUTFALL FROM POND TO SOUTHERN DITCH - HEADWALL SECTION

1. Bags should be Hessian or canvas and shall be of a size to provide a wall thickness of 500mm

2. Concrete bagwork shall be Class 519 and be three quarter filled with 25mm slump ST4 concrete immediately prior to placing with the ends sewn.

3. The bags shall be placed in a modified flemish bond so as to 'break joint' with mouths away from the surface and be tamped into position to form a rectangular block.

4. No part of the headwall structure should encroach into the profile of the ditch.

GENERAL NOTES:

1. DIMENSIONS ON THIS DRAWING SHALL NOT BE SCALED. ALL DIMENSIONS TO BE CHECKED ON SITE. ALL DETAILS AND DIMENSIONING RELATING TO SUB-CONTRACTOR'S OR SUPPLIER'S WORK MUST BE CHECKED AND AGREED BETWEEN THE SUB-CONTRACTOR OR THE SUPPLIER AND THE GENERAL CONTRACTOR.
2. THIS DRAWING IS TO BE READ IN CONJUNCTION WITH ALL RELEVANT ARCHITECT'S AND ENGINEERS DRAWINGS AND SPECIFICATION.
3. THE CONTRACTOR IS RESPONSIBLE FOR VERIFYING ALL SITE DIMENSIONS BEFORE COMMENCING WORK.
4. THE MAIN CONTRACTOR IS RESPONSIBLE FOR ENSURING THE STABILITY OF THE STRUCTURE WHILST THE WORKS ARE IN PROGRESS.
5. DIFFERENCES BETWEEN THIS DRAWING AND THE SITE CONDITIONS ENCOUNTERED MUST BE REPORTED TO THE ENGINEER.

NOTATION:-

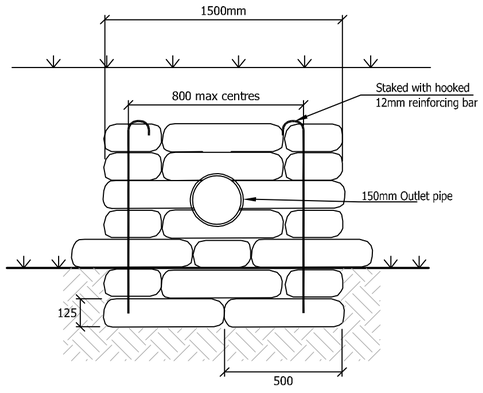
T.O.S. - TOP OF STEEL. S.S.L. - STRUCTURAL SLAB LEVEL.
F.G.L. - FINISH GROUND LEVEL. F.F.L. - FINISHED FLOOR LEVEL.
T.O.C. - TOP OF CONCRETE. T.O.F. - TOP OF FOUNDATION.
F.L. - FORMATION LEVEL.

GENERAL NOTES:

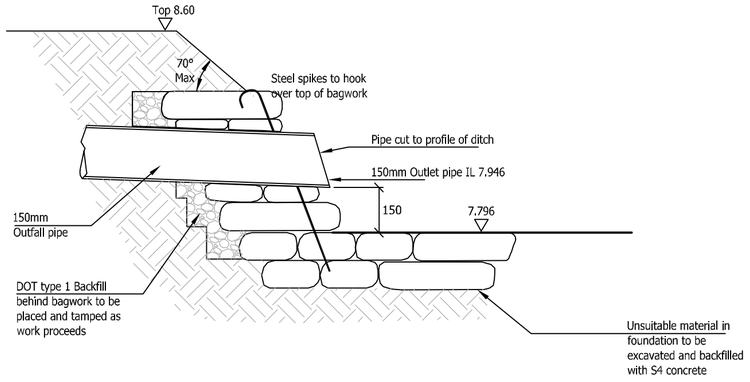
1. DIMENSIONS ON THIS DRAWING SHALL NOT BE SCALED. ALL DIMENSIONS TO BE CHECKED ON SITE. ALL DETAILS AND DIMENSIONING RELATING TO SUB-CONTRACTOR'S OR SUPPLIER'S WORK MUST BE CHECKED AND AGREED BETWEEN THE SUB-CONTRACTOR OR THE SUPPLIER AND THE GENERAL CONTRACTOR.
2. THIS DRAWING IS TO BE READ IN CONJUNCTION WITH ALL RELEVANT ARCHITECT'S AND ENGINEERS DRAWINGS AND SPECIFICATION.
3. THE CONTRACTOR IS RESPONSIBLE FOR VERIFYING ALL SITE DIMENSIONS BEFORE COMMENCING WORK.
4. THE MAIN CONTRACTOR IS RESPONSIBLE FOR ENSURING THE STABILITY OF THE STRUCTURE WHILST THE WORKS ARE IN PROGRESS.
5. DIFFERENCES BETWEEN THIS DRAWING AND THE SITE CONDITIONS ENCOUNTERED MUST BE REPORTED TO THE ENGINEER.

NOTATION:-

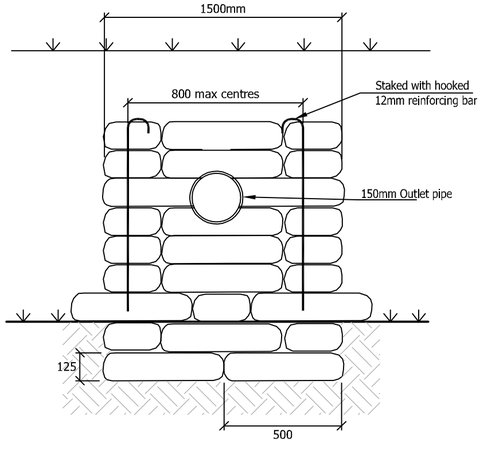
T.O.S. - TOP OF STEEL. S.S.L. - STRUCTURAL SLAB LEVEL.
F.G.L. - FINISH GROUND LEVEL. F.F.L. - FINISHED FLOOR LEVEL.
T.O.C. - TOP OF CONCRETE. T.O.F. - TOP OF FOUNDATION.
F.L. - FORMATION LEVEL.



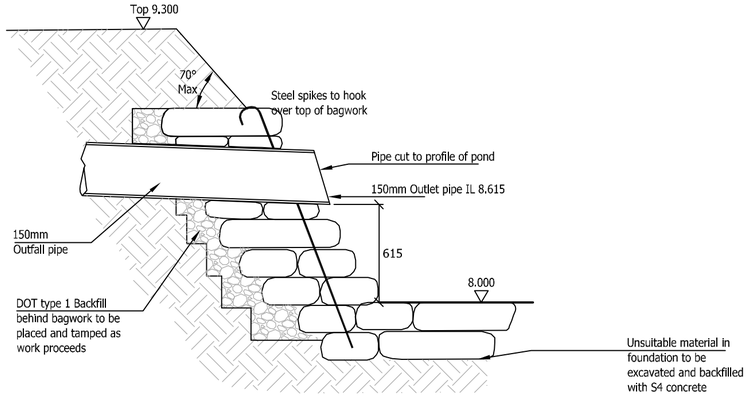
ELEVATION OF HEADWALL



150mm DIA OUTFALL FROM LAND DRAIN TO EASTERN DITCH - HEADWALL SECTION



ELEVATION OF HEADWALL



150mm DIA PIPE OUTFALL TO POND HEADWALL SECTION

REV	DATE	DESCRIPTION	BY	CHK	APP
C1	28.08.20	CONSTRUCTION ISSUE	MR	SDL	GO
T2	04.08.20	HEADWALL DETAILS REVISED	SDL	MR	
T1	10.07.20	TENDER ISSUE	SDL	MR	
P2	18.06.20	REVISED TO LATEST LAYOUT	SDL	MR	
P1	11.03.20	INITIAL ISSUE	GS	MR	

Gyoury Self
CONSULTING ENGINEERS
16/17 BOUNDARY ROAD, HOVE,
EAST SUSSEX BN3 4EF
TELEPHONE 01273 414413
E-MAIL: mail@gsphove.co.uk
Website: www.gyouryself.com
Also at Fareham and St Albans

CLIENT: REDROW HOMES

ARCHITECT: RH PARTNERSHIP

JOB TITLE: ANGEL & HYDE NURSERIES
YAPTON ROAD
BARNHAM

DRAWING TITLE: OUTFALL HEADWALL TO POND/ DITCH CONSTRUCTION DETAIL (NON-ADOPTABLE)

JOB No.	SCALE @ A2	DATE
H19812	1:20	MARCH 2020

DRAWN	ENGINEER	CHECKED	APP
MR	GTA	-	-

STATUS: D2 — DRAWING SUITABILITY: SUITABLE FOR CONSTRUCTION

REVISION: C1 — RIBA STATUS: STAGE 5 - CONSTRUCTION

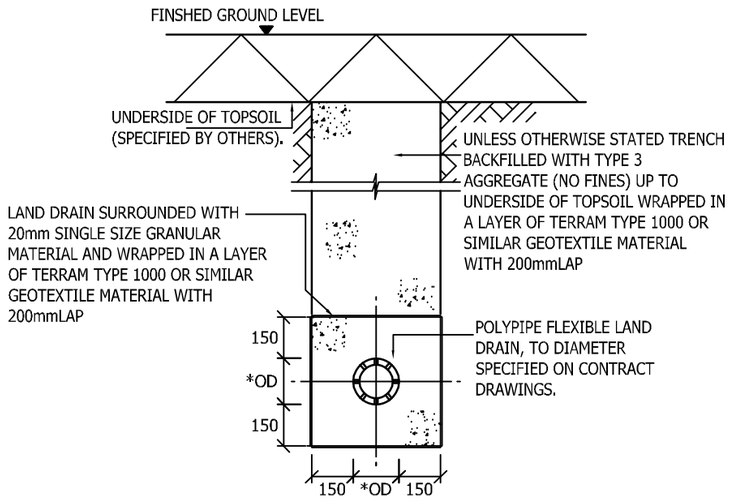
DRAWING No.: 19812-GS-Z1-XX-DR-C-2106

GENERAL NOTES:

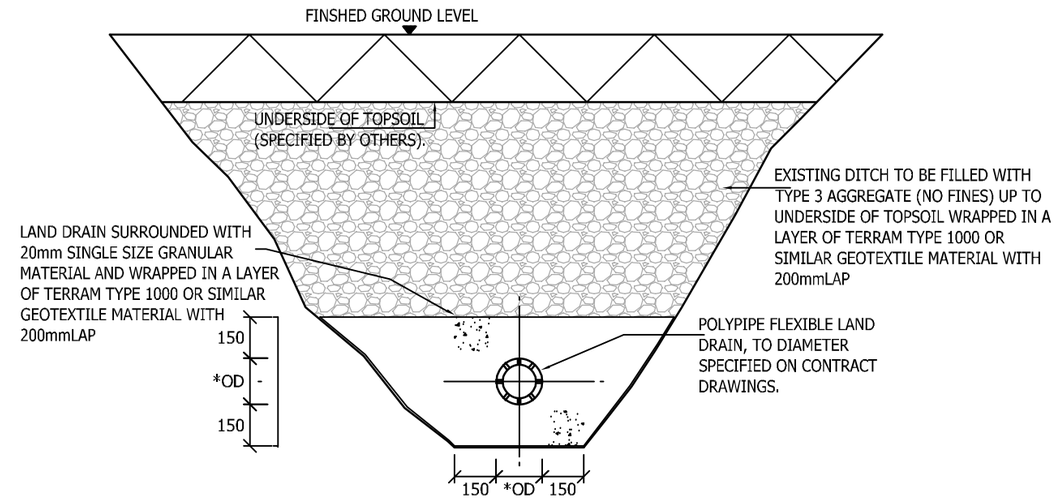
1. DIMENSIONS ON THIS DRAWING SHALL NOT BE SCALED. ALL DIMENSIONS TO BE CHECKED ON SITE. ALL DETAILS AND DIMENSIONING RELATING TO SUB-CONTRACTOR'S OR SUPPLIER'S WORK MUST BE CHECKED AND AGREED BETWEEN THE SUB-CONTRACTOR OR THE SUPPLIER AND THE GENERAL CONTRACTOR.
2. THIS DRAWING IS TO BE READ IN CONJUNCTION WITH ALL RELEVANT ARCHITECT'S AND ENGINEERS DRAWINGS AND SPECIFICATION.
3. THE CONTRACTOR IS RESPONSIBLE FOR VERIFYING ALL SITE DIMENSIONS BEFORE COMMENCING WORK.
4. THE MAIN CONTRACTOR IS RESPONSIBLE FOR ENSURING THE STABILITY OF THE STRUCTURE WHILST THE WORKS ARE IN PROGRESS.
5. DIFFERENCES BETWEEN THIS DRAWING AND THE SITE CONDITIONS ENCOUNTERED MUST BE REPORTED TO THE ENGINEER.

NOTATION:-

T.O.S. - TOP OF STEEL.
F.G.L. - FINISH GROUND LEVEL.
T.O.C. - TOP OF CONCRETE.
F.L. - FORMATION LEVEL.
S.S.L. - STRUCTURAL SLAB LEVEL.
F.F.L. - FINISHED FLOOR LEVEL.
T.O.F. - TOP OF FOUNDATION.



LAND DRAIN



LAND DRAIN IN EXISTING DITCH

REV	DATE	DESCRIPTION	BY	CHK	APP
C1	28.08.20	CONSTRUCTION ISSUE	SDL	MR	GO
T1	04.08.20	TENDER ISSUE	SDL	MR	GO

Gyoury Self
CONSULTING ENGINEERS
16/17 BOUNDARY ROAD, HOVE,
EAST SUSSEX BN3 4EF
TELEPHONE 01273 414413
E-MAIL: mail@gsphove.co.uk
Website: www.gyourself.com
Also at Fareham and St Albans

CLIENT: REDROW HOMES

ARCHITECT: RH PARTNERSHIP

JOB TITLE: ANGEL & HYDE NURSERIES
YAPTON ROAD
BARNHAM

DRAWING TITLE: LAND DRAIN/ DITCH DETAILS

JOB No.	SCALE @ A3	DATE
H19812	1:20	AUG 2020

DRAWN	ENGINEER	CHECKED	APP
SDL	GTA	-	-

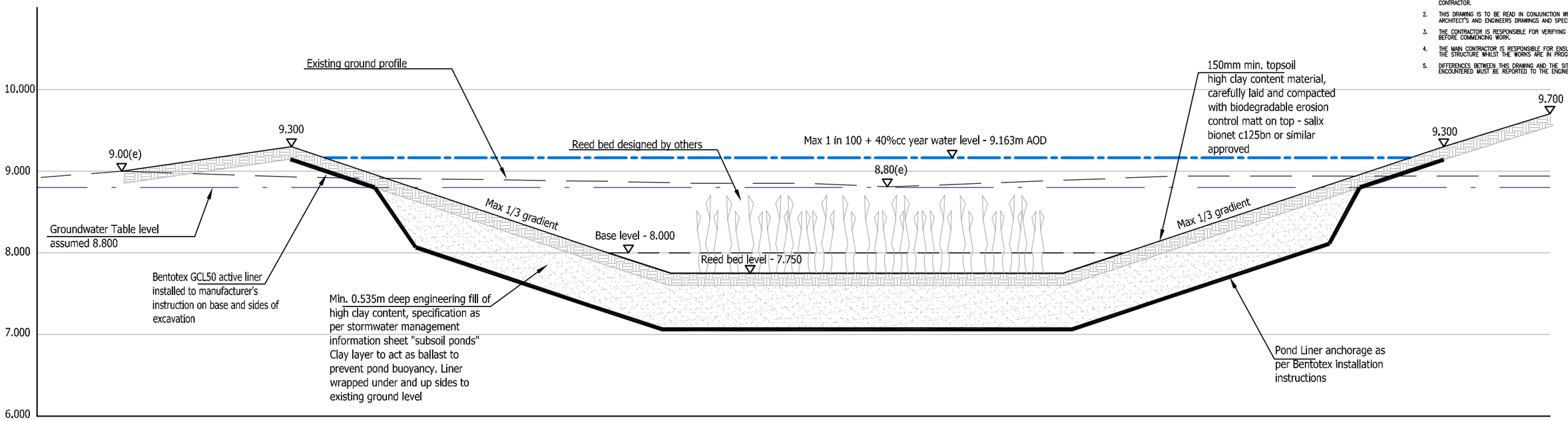
STATUS: D2 — DRAWING SUITABILITY: SUITABLE FOR CONSTRUCTION

REVISION: C1 — RIBA STATUS: STAGE 5 – CONSTRUCTION

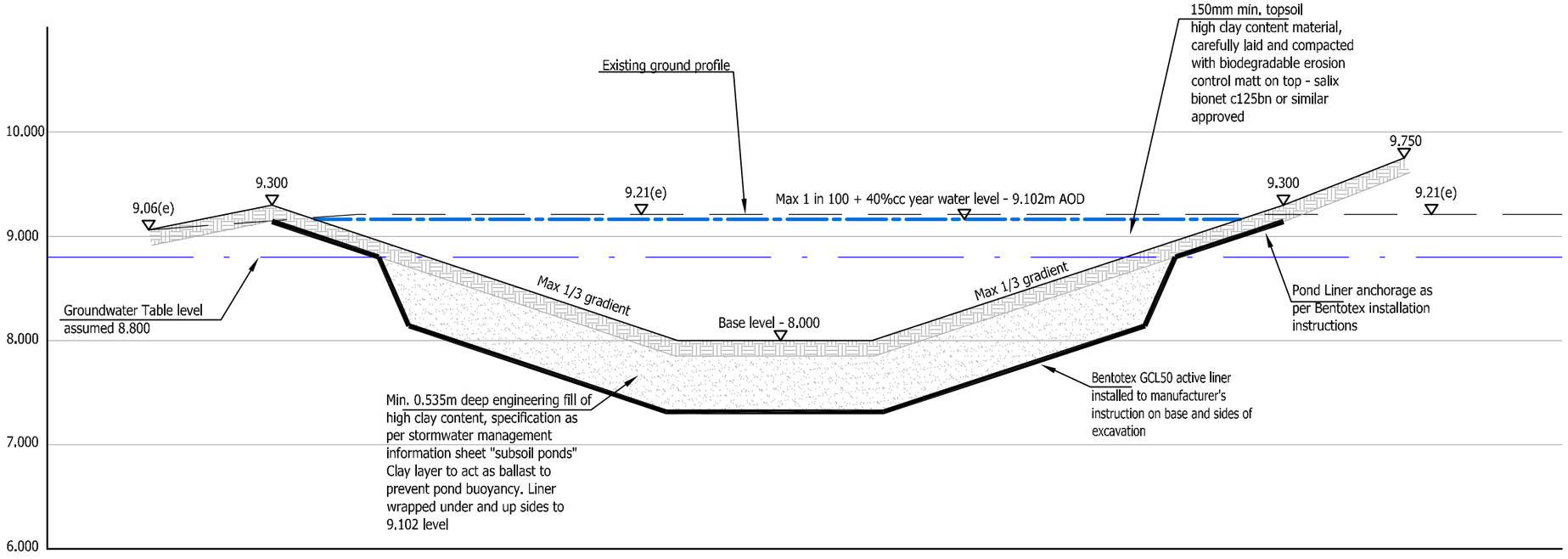
DRAWING No.: 19812-GS-Z1-XX-DR-C-2107

GENERAL NOTES:

1. DIMENSIONS ON THIS DRAWING SHALL NOT BE SCALED. ALL DIMENSIONS TO BE CHECKED ON SITE. ALL DETAILS AND DIMENSIONING RELATING TO SUB-CONTRACTOR'S OR SUPPLIER'S WORK MUST BE CHECKED AND AGREED BETWEEN THE SUB-CONTRACTOR OR THE SUPPLIER AND THE GENERAL CONTRACTOR.
2. THIS DRAWING IS TO BE READ IN CONJUNCTION WITH ALL RELEVANT ARCHITECT'S AND ENGINEERS DRAWINGS AND SPECIFICATION.
3. THE CONTRACTOR IS RESPONSIBLE FOR VERIFYING ALL SITE DIMENSIONS BEFORE COMMENCING WORK.
4. THE MAIN CONTRACTOR IS RESPONSIBLE FOR ENSURING THE STABILITY OF THE STRUCTURE WHILST THE WORKS ARE IN PROGRESS.
5. DIFFERENCES BETWEEN THIS DRAWING AND THE SITE CONDITIONS ENCOUNTERED MUST BE REPORTED TO THE ENGINEER.



SECTION AA - POND CONSTRUCTION DETAILS
(1:50)



SECTION BB - POND CONSTRUCTION DETAILS
(1:50)

REV	DATE	DESCRIPTION	BY	CHK	APP
C1	28.08.20	CONSTRUCTION ISSUE	SDL	MR	GO
T1	04.08.20	TENDER ISSUE	SDL	MR	GO

Gyoury Self
CONSULTING ENGINEERS
16/17 BOUNDARY ROAD, HOVE,
EAST SUSSEX BN3 4EF
TELEPHONE 01273 414413
E-MAIL: mail@gsphove.co.uk
Website: www.gyourself.com
Also at Fareham and St Albans

CLIENT: REDROW HOMES

ARCHITECT: RH PARTNERSHIP

JOB TITLE: ANGEL & HYDE NURSERIES
YAPTON ROAD
BARNHAM

DRAWING TITLE: POND SECTIONS

JOB No.	SCALE @ A3	DATE
H19812	1:50	AUG 2020

DRAWN	ENGINEER	CHECKED	APP
SDL	GTA	-	-

STATUS: D2 — DRAWING SUITABILITY: SUITABLE FOR CONSTRUCTION

REVISION: C1 — RIBA STATUS: STAGE 5 – CONSTRUCTION

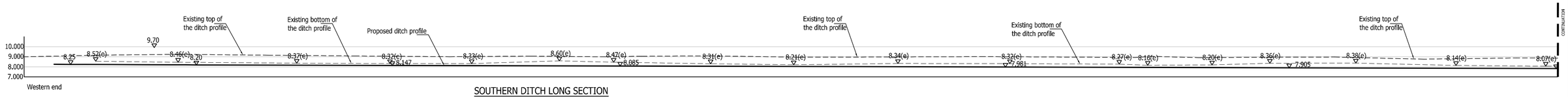
DRAWING No.: 19812-GS-Z1-XX-DR-C-2108

GENERAL NOTES:

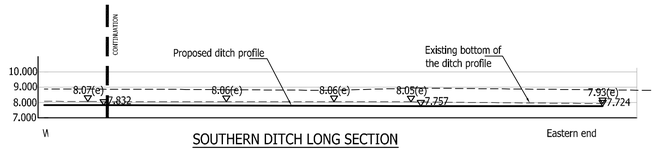
1. DIMENSIONS ON THIS DRAWING SHALL NOT BE SCALED. ALL DIMENSIONS TO BE CHECKED ON SITE. ALL DETAILS AND DIMENSIONING RELATING TO SUB-CONTRACTOR'S OR SUPPLIER'S WORK MUST BE CHECKED AND AGREED BETWEEN THE SUB-CONTRACTOR OR THE SUPPLIER AND THE GENERAL CONTRACTOR.
2. THIS DRAWING IS TO BE READ IN CONJUNCTION WITH ALL RELEVANT ARCHITECT'S AND ENGINEERS DRAWINGS AND SPECIFICATION.
3. THE CONTRACTOR IS RESPONSIBLE FOR VERIFYING ALL SITE DIMENSIONS BEFORE COMMENCING WORK.
4. THE MAIN CONTRACTOR IS RESPONSIBLE FOR ENSURING THE STABILITY OF THE STRUCTURE WHILST THE WORKS ARE IN PROGRESS.
5. DIFFERENCES BETWEEN THIS DRAWING AND THE SITE CONDITIONS ENCOUNTERED MUST BE REPORTED TO THE ENGINEER.

NOTATION:-

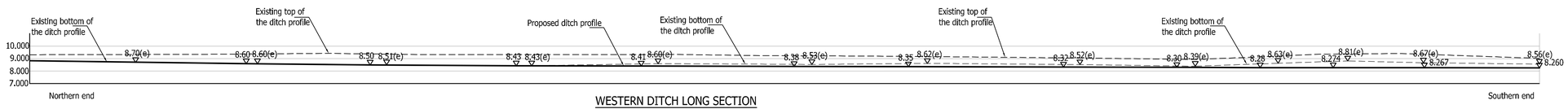
T.O.S. - TOP OF STEEL.
F.G.L. - FINISH GROUND LEVEL.
T.O.C. - TOP OF CONCRETE.
F.L. - FORMATION LEVEL.
S.S.L. - STRUCTURAL SLAB LEVEL.
F.F.L. - FINISHED FLOOR LEVEL.
T.O.F. - TOP OF FOUNDATION.



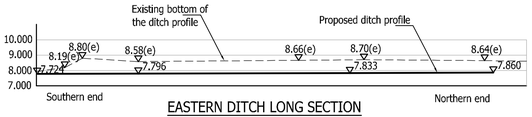
SOUTHERN DITCH LONG SECTION
(1:200)



SOUTHERN DITCH LONG SECTION
(1:200)



WESTERN DITCH LONG SECTION
(1:200)



EASTERN DITCH LONG SECTION
(1:200)

REV	DATE	DESCRIPTION	BY	CHK	APP
C1	28.08.20	CONSTRUCTION ISSUE	SDL	MR	GO
T1	04.08.20	TENDER ISSUE	SDL	MR	GO

Gyoury Self
CONSULTING ENGINEERS
16/17 BOUNDARY ROAD, HOVE,
EAST SUSSEX BN3 4EF
TELEPHONE 01273 414413
E-MAIL: mail@gsphove.co.uk
Website: www.gyouryself.com
Also at Fareham and St Albans

CLIENT: REDROW HOMES

ARCHITECT: RH PARTNERSHIP

JOB TITLE: ANGEL & HYDE NURSERIES
YAPTON ROAD
BARNHAM

DRAWING TITLE: DITCH LONG SECTIONS

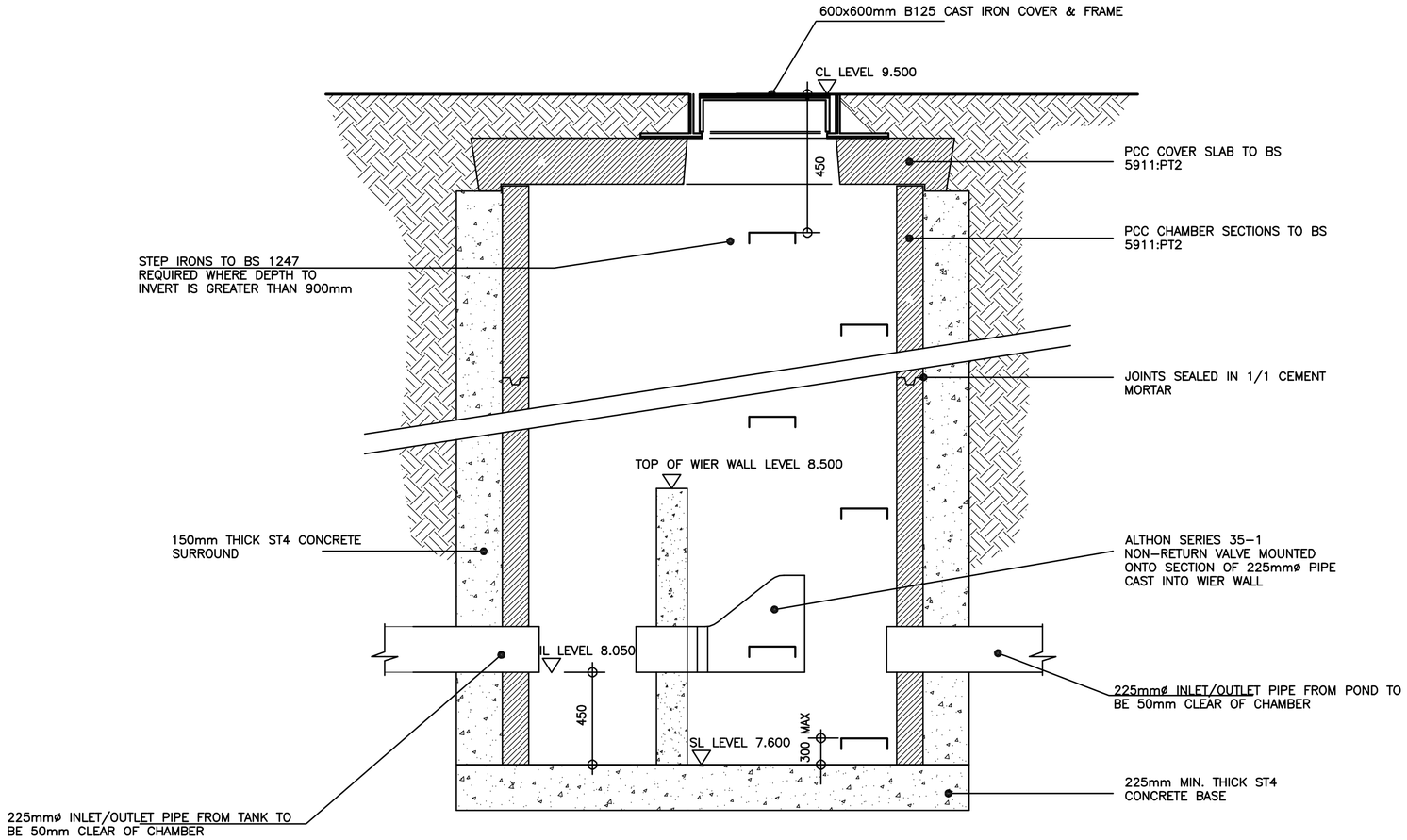
JOB No.	SCALE @ A1	DATE
H19812	1:200	JULY 2020

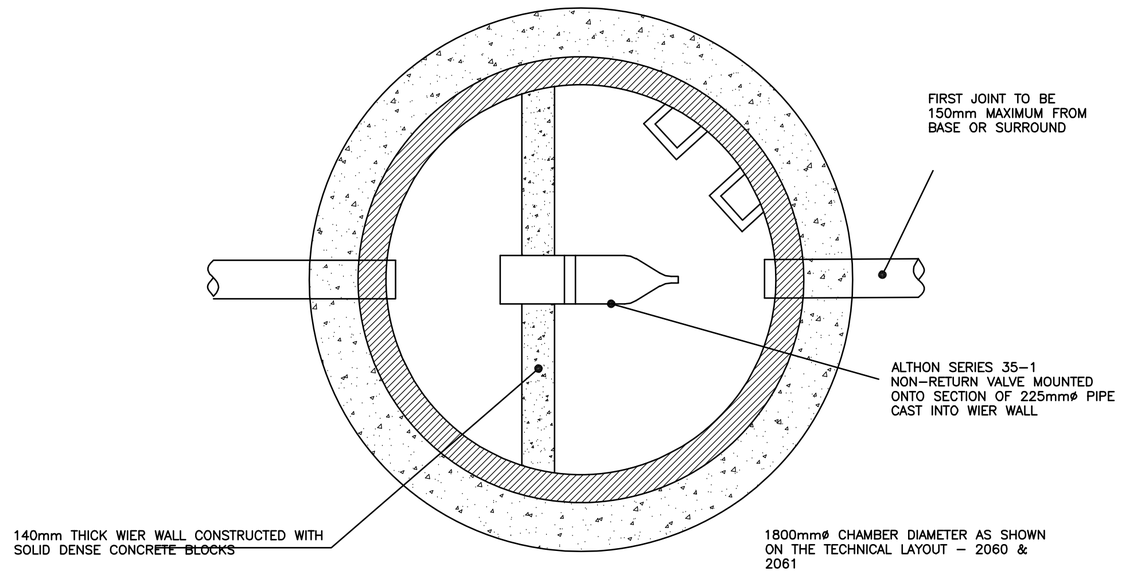
DRAWN	ENGINEER	CHECKED	APP
KW	GTA		

STATUS: D2 — DRAWING SUITABILITY: SUITABLE FOR CONSTRUCTION

REVISION: C1 — RIBA STATUS: STAGE 5 - CONSTRUCTION

DRAWING No.: 19812-GS-Z1-XX-DR-C-2109





PRECAST CONCRETE CATCHPIT WITH WIER WALL
D202.21

(1:20)

GENERAL NOTES:

1. DIMENSIONS ON THIS DRAWING SHALL NOT BE SCALED. ALL DIMENSIONS TO BE CHECKED ON SITE. ALL DETAILS AND DIMENSIONING RELATING TO SUB-CONTRACTOR'S OR SUPPLIER'S WORK MUST BE CHECKED AND AGREED BETWEEN THE SUB-CONTRACTOR OR THE SUPPLIER AND THE GENERAL CONTRACTOR.
2. THIS DRAWING IS TO BE READ IN CONJUNCTION WITH ALL RELEVANT ARCHITECT'S AND ENGINEERS DRAWINGS AND SPECIFICATION.
3. THE CONTRACTOR IS RESPONSIBLE FOR VERIFYING ALL SITE DIMENSIONS BEFORE COMMENCING WORK.
4. THE MAIN CONTRACTOR IS RESPONSIBLE FOR ENSURING THE STABILITY OF THE STRUCTURE WHILST THE WORKS ARE IN PROGRESS.
5. DIFFERENCES BETWEEN THIS DRAWING AND THE SITE CONDITIONS ENCOUNTERED MUST BE REPORTED TO THE ENGINEER.

NOTATION:–

T.O.S.– TOP OF STEEL. S.S.L.– STRUCTURAL SLAB LEVEL.
F.G.L.– FINISH GROUND LEVEL. F.F.L.– FINISHED FLOOR LEVEL.
T.O.C.– TOP OF CONCRETE. T.O.F.–
TOP OF FOUNDATION.
F.L. – FORMATION LEVEL.

REV	DATE	DESCRIPTION	BY	CHK	APP
C1	16.09.20	INITIAL ISSUE	GS	MR	

Gyoury Self
CONSULTING ENGINEERS
16/17 BOUNDARY ROAD, HOVE,
EAST SUSSEX BN3 4EF
TELEPHONE 01273 414413
E-MAIL: mail@gsphove.co.uk
Website: www.gyouryself.com
Also at Fareham and St Albans

CLIENT: REDROW HOMES

ARCHITECT: RH PARTNERSHIP

JOB TITLE: ANGEL & HYDE NURSERIES
YAPTON ROAD
BARNHAM

DRAWING TITLE: CONCRETE CATCHPIT WITH WIER WALL CONSTRUCTION DETAIL (NON-ADOPTABLE)

JOB No.	SCALE @ A2	DATE
H19812	1:20	SEPTEMBER 2020

DRAWN	ENGINEER	CHECKED	APP
MR	GTA	-	-

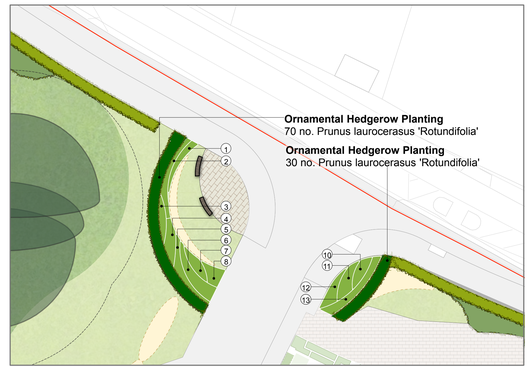
STATUS: D2 DRAWING SUITABILITY: SUITABLE FOR CONSTRUCTION

REVISION: C1 RIBA STATUS: STAGE 5 – CONSTRUCTION

DRAWING No.: 19812-GS-Z1-XX-DR-C-2113



INSET 1



1	15 no. Rosa 'Kent'
2	22 no. Hebe 'Mr. Winder
3	14 no. Cistus corbariensis
4	21 no. Lonicera pileata
5	22 no. Aucuba japonica 'Kew Green'
6	32 no. Hebe 'Red Edge'
7	16 no. Rosa 'Kent'
8	17 no. Pachysandra terminalis
10	16 no. Rosa 'Kent'
11	21 no. Lonicera pileata
12	18 no. Pachysandra terminalis
13	30 no. Cistus corbariensis

Key

- Site boundary
- Existing vegetation to be retained
- Root protection area
- Existing vegetation to be removed
- Proposed feature trees
- Proposed tree planting
- Native shrub planting
- Native hedgerow planting
- Ornamental planting
- Ornamental hedge planting
- Areas of proposed amenity grass e.g. Germinal Seeds A22 or similiar approved
- Areas of proposed long grass - to be maintained approximately between 100-200mm in height e.g. Emorsgate seeds EG5 or similar approved
- Bulb planting
- Proposed attenuation basins - design to engineers specification. To be seeded with a wildflower meadow mix suitable for seasonally wet soils e.g. Meadowmania MAS-WWILD7 or similar approved
- Proposed block paving laid in herringbone pattern eg. Marshalls Keyblock in Natural 200x100x60mm or similar approved
- Timber bollards - 1.0m height
- BE Benches - to be a mixture of timber and cast iron of a simple style, to be root fixed e.g. Furnitubes New Forest Bench for 3 persons NEB6
- LB Litter bins - to be a mixed timber/steel litter bin of a simple contemporary style to complement the seats/benches, to be root fixed e.g. Furnitubes Jubilee Litter Bin with galvanised steel frame JUB405T
- DB Dog waste bins - to be a steel dog waste bin of a simple contemporary style to be root fixed e.g. Furnitubes Lucky Dog Bin galvanised and powder coated in green LUK 745F
- Easment
- Existing ditch filled tith compacted type 3 material, wrapped in Terram Please refer to 'Site Drainage' dwg. no. 19812-GS-Z1-XX-DR-C-2061 by Gyoury Self Consulting Engineers
- Offline Cellular storage tank. 5.5m x 33m x 0.8m deep. Please refer to 'Site Drainage' dwg. no. 19812-GS-Z1-XX-DR-C-2061 by Gyoury Self Consulting Engineers

Tree Planting

Species	Girth (cm)	Height (cm)	Form	Clear Stem (cm)	Container Size
Alnus glutinosa	14-16	400-450	Extra Heavy Standard; 5 breaks	200	45-85L
Betula pendula	14-16	400-450	Extra Heavy Standard; 5 breaks	175-200	45-85L
Carpinus betulus	16-18	400-450	Extra Heavy Standard;	-	80-100L
Fagus sylvatica 'Rohanii'	18-20	450-500	Extra Heavy Standard;	-	80-100L
Liriodendron tulipifera	14-16	400-450	Extra Heavy Standard; 5 breaks	175-200	45-85L
Magnolia x soulangeana	14-16	400-450	Extra Heavy Standard;	175-200	45-85L
Malus 'Evereste'	14-16	400-450	Extra Heavy Standard;	175-200	45-85L
Sorbus aria 'Magnifica'	14-16	400-450	Extra Heavy Standard; 5 breaks	175-200	45-85L
Tilia cordata	14-16	400-450	Extra Heavy Standard;5 breaks	175-200	45-85L

Native Shrub Planting
To be planted at 3/m²

Species	Mix %	Height (cm)	Form	Age	Root Condition
Cornus sanquinea	25	60-80	Branched	1+2	B
Corylus avellana	15	60-80	Branched	1+2	B
Ligustrum vulgare	35	60-80	Branched	1+1	B
Rosa arvensis	10	60-80	Branched	1+1	B
Sambucus nigra	15	80-100	Branched	1+1	B

Native Hedgerow
To be planted at in double staggered rows 400mm apart @ 450mm centres

Species	Mix %	Height (cm)	Form	Age	Root Condition
Acer campestre	5	60-80	Branched	1+1	B
Crataegus monogyna	80	60-80	Branched	1+1	B
Corylus avellana	10	60-80	Branched	1+2	B
Ilex aquifolium	5	60-80	Leader with laterals	-	3L

Note: mixes to be planted in an evenly spaced but irregular pattern (i.e. no grids or lines) in single species groups with approximately 3-7 plants per group.

Ornamental Hedgerow
To be planted at 600mm centres

Species	Height (cm)	Form	Root Condition
Prunus laurocerasus 'Rotundifolia'	100-125	Bushy; 7 breaks	15L

Ornamental Shrub Planting

Species	Height (cm)	Specification	Pot Size	Density
Aucuba japonica 'Rozannie'	40-60	Bushy; C	5L	4/m²
Cistus corbariensis	30-40	Bushy; C	5L	4/m²
Hebe 'Red Edge'	30-40	Byshy; C	5L	4/m²
Hebe 'Mr Winder'	30-40	Bushy; C	5L	4/m²
Lonicera pileata	40-60	Bushy; C	5L	4/m²
Pachysandra terminalis	30-40	Several shoots; C	5L	4/m²
Rosa 'Kent'	30-40	Bushy; C	5L	4/m²
Skimmia confusa 'Kew Green'	30-40	Bushy; C	5L	4/m²

Bulb Planting

Species	Size	Density (m²)
Crocus biflorus 'Blue Pearl'	5/+	20
Crocus 'Pickwick'	7/8	15
Crocus Prins Claus'	5/7	20
Crocus speciosus 'Albus'	5/+	15
Colchicum autumnale 'Album'	13+	15
Narcissus 'Lieke'	14/16	15

Amenity Grassland
Germinal Seeds A22 seed mixture, or similar recommended, for use in the creation of hard wearing amenity grassland. To be sown at 35g/m2 to allow for rapid establishment.

%	Latin Name	Common Name
35	Festuca rubra	Slender-creeping Red-fescue
60	Lolium perenne	Perennial Ryegrass
5	Agrostis capillaris	Common Bent

Species-Rich Long Grassland Species Selection
Emorsgate Seeds EG5 meadow grass mixture for loamy soils, or similar recommended.
To be sown at 20g/m2 to allow for rapid establishment.

Grasses (100%)

%	Latin name	Common name
12.5	Agrostis capillaris	Common Bent
1.25	Anthoxanthum odoratum	Sweet Vernal-grass (w)
2.5	Briza media	Quaking Grass (w)
40	Cynosurus cristatus	Crested Dogstail
12.5	Festuca ovina	Sheep's Fescue
25	Festuca rubra	Red Fescue (w)
5	Phleum bertolonii	Smaller Cat's-tail
1.25	Trisetum flavescens	Yellow Oat-grass (w)

Meadow Mixture for Wetlands

Emorsgate EM8. Mixture to be sown at a rate of 4g/m2.

%	Latin Name	Common Name
Wildflowers		
0.5	Achillea millefolium	Yarrow
0.2	Achillea ptarmica	Sneezewort
1	Betonica officinalis	Betony
2.5	Centaurea nigra	Common Knapweed
2	Filipendula ulmaria	Meadowsweet
1.5	Galium verum	Lady's Bedstraw
0.4	Geum rivale	Water avens
0.6	Leucanthemum vulgare	Oxeye Daisy
0.8	Lotus pendunculatus	Greater Birdsfoot Trefoil
1	Plantago lanceolata	Ribwort Plantain
0.2	Primula veris	Cowslip
1.5	Prunella vulgaris	Selfheal
2.5	Ranunculus acris	Meadow Buttercup
1.5	Rhinanthus minor	Yellow Rattle
1.5	Rumex acetosa	Common Sorrel
1	Sanguisorba officinalis	Great Burnet
0.2	Silene flos-cuculi	Ragged Robin
0.6	Succisa pratensis	Devil's-bit Scabious
0.5	Vicia cracca	Tufted Vetch
20		
Grasses		
10	Agrostis capillaris	Common Bent
2	Alopecurus pratensis	Meadow Foxtail
2	Anthoxanthum odoratum	Sweet Vernal-grass
1	Briza media	Quaking Grass
32	Cynosurus cristatus	Crested Dogstail
1	Deschampsia cespitosa	Tufted Hair-grass
24	Festuca rubra	Slender-creeping Red-fescue
1	Hordeum secalinum	Meadow Barley
7	Schedonorus pratensis	Meadow Fescue
80		

Location Plan (NTS)



Note:

-For Detailed Soft On Plot Landscape Proposals refer to Pegasus dwg. no. **P19-2044_03**
-For Landscape Masterplan refer to Pegasus dwg no. P19-2044_01

-For planting specification please refer to **P19-2044_02** (Sheet 2)

Revisions:
First Issue- 24/02/2020 JN
A - (23/06/2020 ARW) Amended to suit revised layout
B - (16/07/2020 NHA) Ammended to suit layout P19-0723_10M
C - (14/09/2020 JN) Landscape proposals amended in accordance with layout P19-0723_10P & Site Drainage.
D - (02/11/2020 NHA) Landscsape proposals updated in line with engineer's comments

Detailed Public Open Space Landscape Proposals
Land at Angels Nursery, Yapton Road, Barnham

Sheet 1 of 2

Client: Redrow Homes (Southern Counties)

DRWG No: **P19-2044_02** Sheet No:1 REV: D

Drawn by : JN Approved by: NHA

Date: 02/11/2020

Scale: 1:250 @ A0

Pegasus Design

Copyright Pegasus Planning Group Ltd. Crown copyright. All rights reserved. 2020 Emapsite Licence number 0100031673. Ordnance Survey Copyright Licence number 100042093. Promap Licence number 100020449
Pegasus accepts no liability for any use of this document other than for its original purpose, or by the original client, or following Pegasus' express agreement to such use. T 01285641717 www.pegasusgroup.co.uk