PLANNING

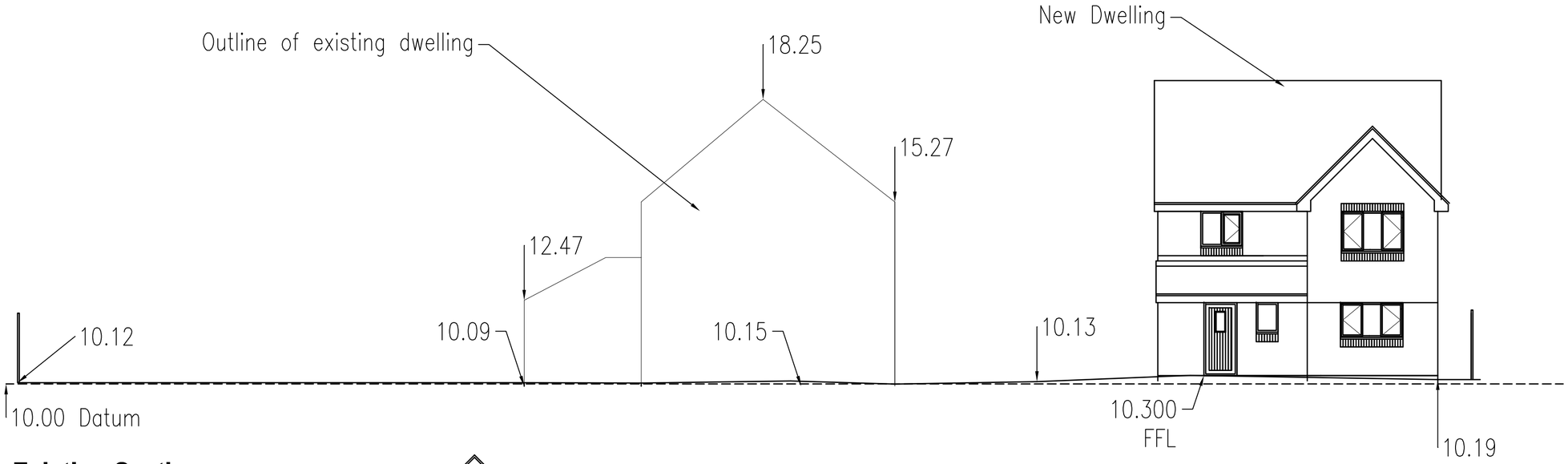

Existing Section **Scale 1:100@A2**

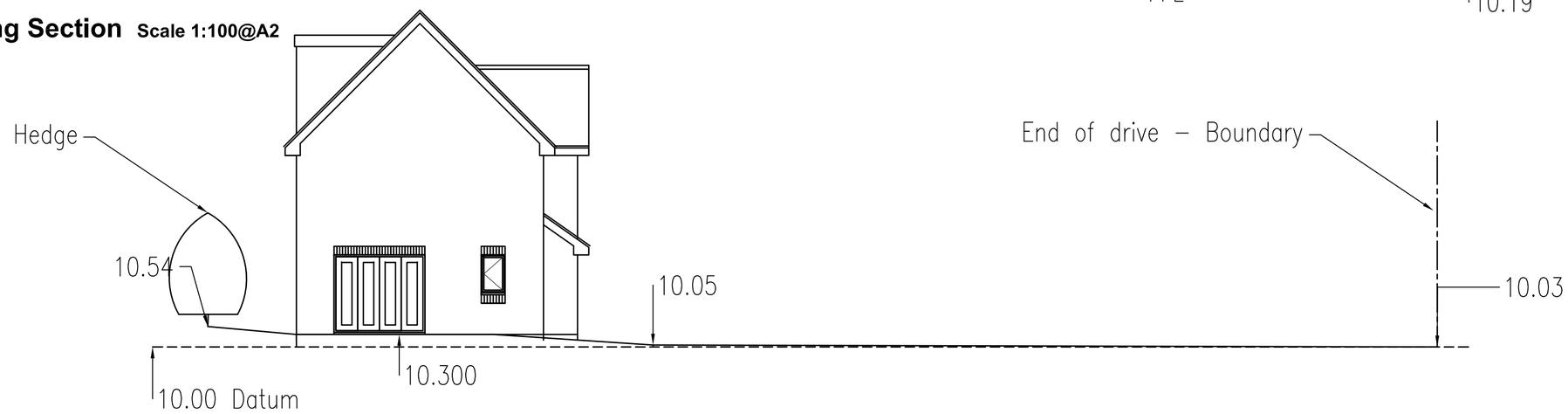

Existing Section **Scale 1:100@A2**

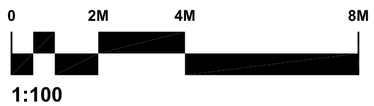

Rev.	Description	Drawn	Date

Client Mr and Mrs J Hampton

Project Annex building, 1 Railway View, Gospond Road, PO22 0EX

Title Proposed Site sections

Project ref	Originator	Volume	Level	Type	Role	DRG Number	Suitability	Revision
1663	– ADL –	ZZ	– XX –	DR	– A –	0005	– ?? –	

ADL Ref.	Date	Scale @ A2	Drawn	Checked
1663	Feb 23	1:100	DW	

Other than for the purposes of planning, do not scale these drawings. Use written dimensions only. All dimensions to be checked on site prior to commencement of work. If in doubt.. ask

The copyright of this drawing is reserved to Alpha Design Ltd and may not be reproduced, copied or altered in any way without expressed written authority.

Alpha Design Ltd
Architectural Building Design & Energy Assessment
Ground Floor, 657 High Street, Kingswinford, West Midlands. DY6 8AL.

Architectural Design : Principal Designer
BIM : Swept Path Analysis : SBEM Calculations
BREEAM : Non Domestic EPCS

Tel: 01384 270700 E: info@alphadesignltd.co.uk
Web: www.alphadesignltd.co.uk

ARUN DISTRICT COUNCIL BN/21/23/PL