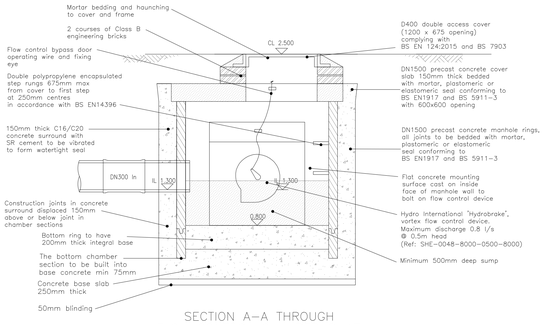

SECTION A–A THROUGH
FLOW CONTROL CHAMBER SW47

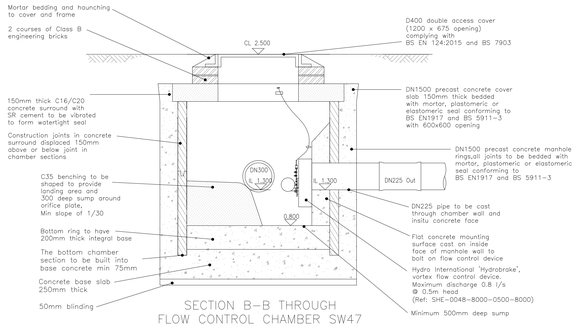

SECTION B–B THROUGH
FLOW CONTROL CHAMBER SW47

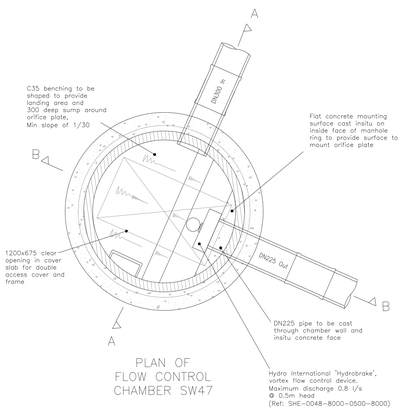

PLAN OF
FLOW CONTROL
CHAMBER SW47

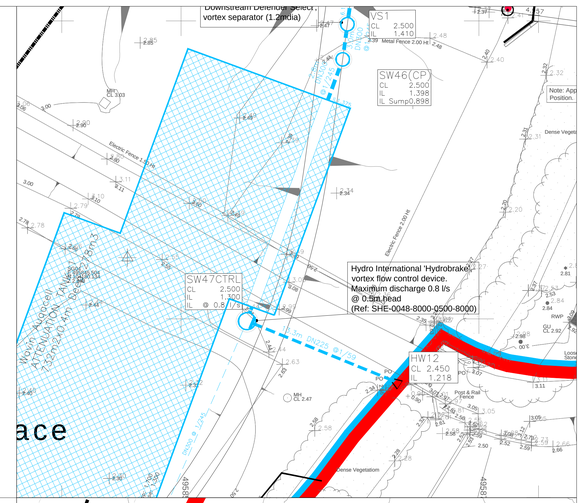
Downstream Defender (c/w vortex separator (1.2m dia)
VS1
CL 2.500
IL 1.410
SW46(CP)
CL 2.500
IL 1.398
IL Sump0.898
Note: App Position.
Hydro International 'Hydrobrake', vortex flow control device. Maximum discharge 0.8 l/s @ 0.5m head (Ref: SHE-0048-8000-0500-8000)
SW47CTRL
CL 2.500
IL @ 0.8 l/s
HW12
CL 2.450
IL 1.218
Wavin Aquacell ATTENUATION TANK 2 187m2x0.4m Deep (71m3)
Dense Vegetation
Dense Vegetation
Post & Rail Fence
Post & Rail Fence
Trap of Railing fence 3.93
Grass
Grass
Top of Railing fence 3.93
Top of Railing fence 3.93
Top of Railing fence 3.93