TREE CONSTRAINTS KEY

Existing tree/hedgerow, as surveyed.

Trees included in the Tree Report LLD288, but not found in the topographic survey so may not be present on site. Locations indicated are approximate. The spread shown is taken from Report LLD288.

Trees for removal.

Direction of inclination of tree (if applicable).

Line of root protection area (RPA). Dimension noted.

Tree data taken from Report LLD288 (Revised 10 May 2011).

Tree spreads and locations as surveyed by Aworth Land Surveys, October 2013.

Tree protection fencing as shown above

Protective fencing to be moved to temporary position to allow for construction

Areas to be constructed using No.dig method of construction

Tree Protection

Weldmesh (Heras type_ fencing panels 2 metres high, fixed together with scaffold clips and with stabiliser strut and base plate with ground pins. (As figure 3a BS5837:2012)

Where branches of retained trees are outside the protection fencing, then fencing should be moved further out to protect branches from vehicle/machine damage, if space permits.
if there is not sufficient space then erect as shown but advise the consultant arboriculture who will be able to advise on the best course of action (e.g. tree surgery).

All tree protection fencing should have all weather notices stating "construction exclusion zone - no access"

No fires within 10 metres of canopy edge of any retained tree and not be lit in a position where heat could affect foliage or branches as a result of wind direction.

No material to be stored within the PRA areas or in a position where accidental spillage would cause damage to a tree.

Site work

Fencing will be erected prior to any trades (with the exception of tree surgeons) working near trees. All trades, especially civil engineering sub-contractors and group workers, will be made aware that damaged fencing erected around tree's is to be reported to the site manager/agent immediately, who will ensure that the fencing repaired as soon as possible. Any tree work required is to be notified to the local authority tree officer. Offending sub-contractors may be contra-charged.

Figure 3a - BS 5837 - 2012

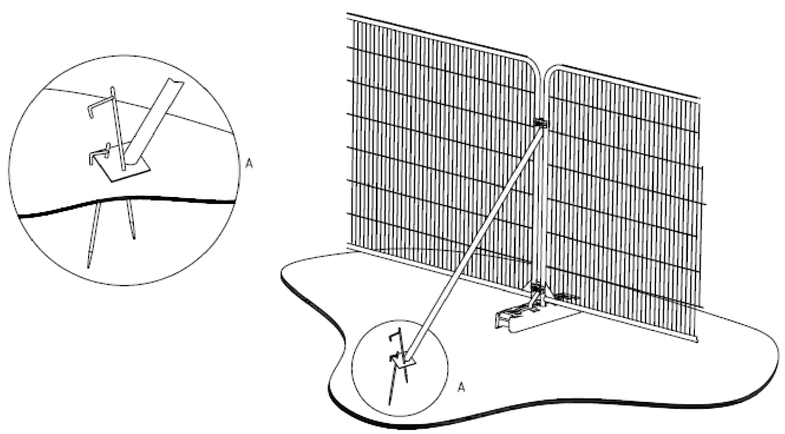

a) Stabilizer strut with base plate secured with ground pins

Croudace HOMES.CO.UK

ARUN DISTRICT COUNCIL BN/1314/

Rev A	Layout amended to suit revisions.	GDR 10/04/14
Rev B	Layout amended to suit revisions.	GDR 11/04/14
Rev C	Layout amended to suit revisions.	GDR 24/04/14

Goodacres, BARNHAM

1:500 @ A1 — 0 5 10 15 20 Metres

Tree Constraints & Protection Plan

Drg No: 117/014/C — February 2014