# Pipe Bedding Constructional Details scale 1:20

## CONCRETE SURROUND (CLASS Z)

TO BE USED WHERE COVER TO CROWN OF PIPE
IS LESS THAN 1200mm IN VEHICULAR AREAS
OR LESS THAN 900mm ELSEWHERE.

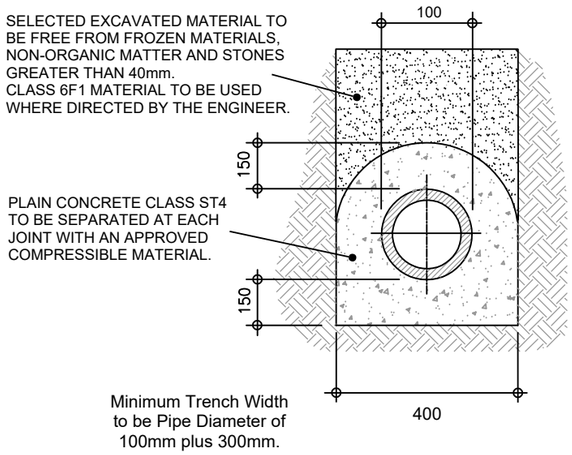


## PIPE SURROUND EXPANSION JOINT DETAIL (TO BE USED IN CONJUNCTION WITH CLASS Z)

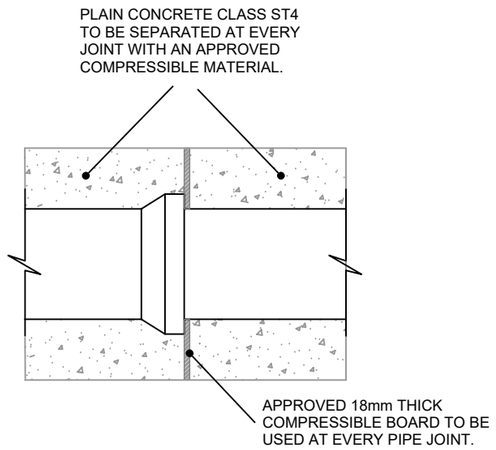


## GRANULAR SURROUND (CLASS S)

TO BE USED WHERE COVER TO CROWN OF PIPE
IS GREATER THAN 1200mm IN VEHICULAR AREAS
OR GREATER THAN 900mm ELSEWHERE.

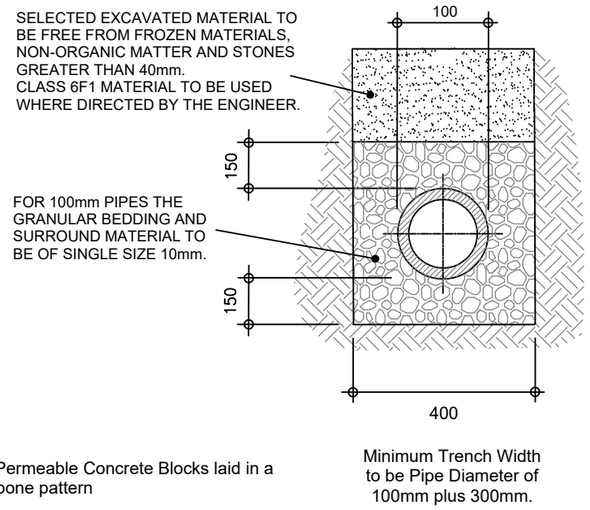


## Typical Access Inspection Chamber -- Type 4 (for use in soft landscaped areas and footways)

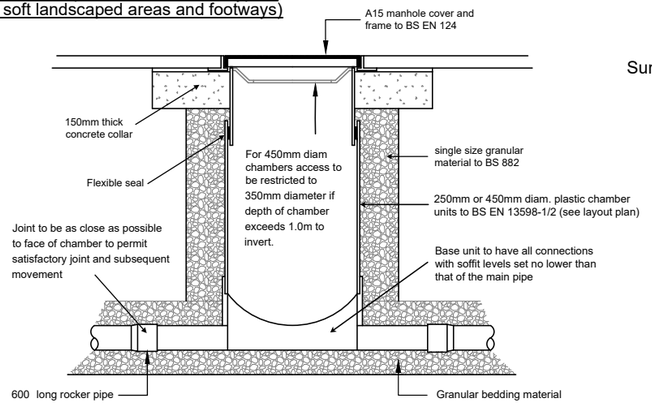


## Typical Permeable Paving -- Scale 1:20

For Depth of CGA refer to Surface Water Drainage Design Notes and Key

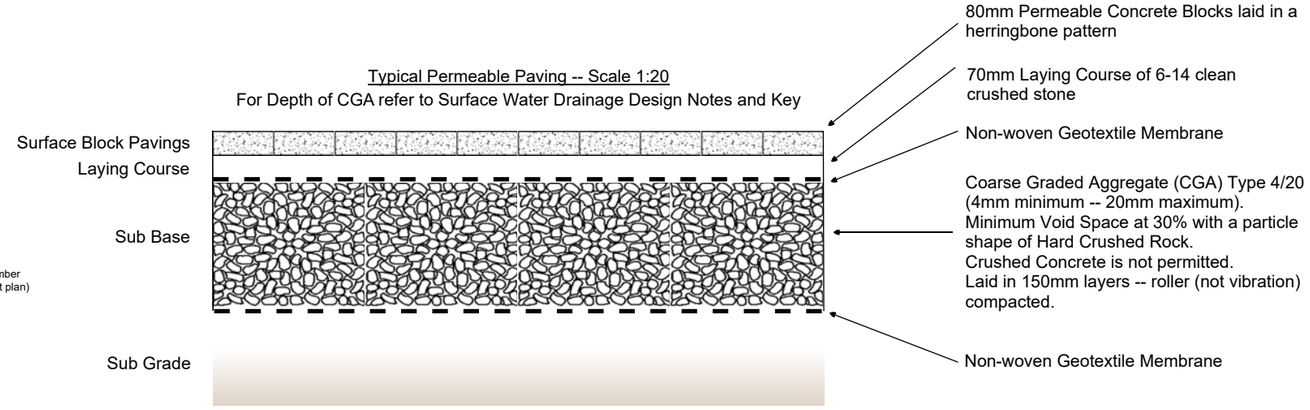


## Typical Silt Trap Inspection Chamber (for use in soft landscaped areas and footways)

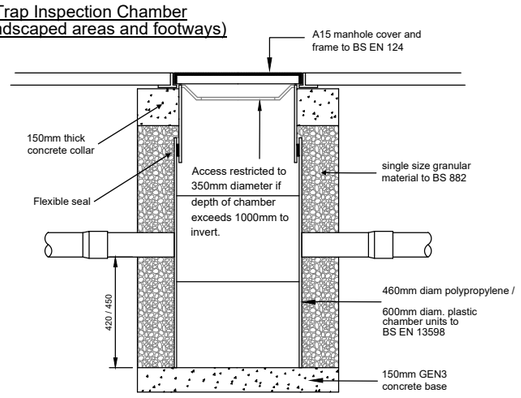


## Typical Geocellular soakaway Unit (for use in soft landscaped areas)

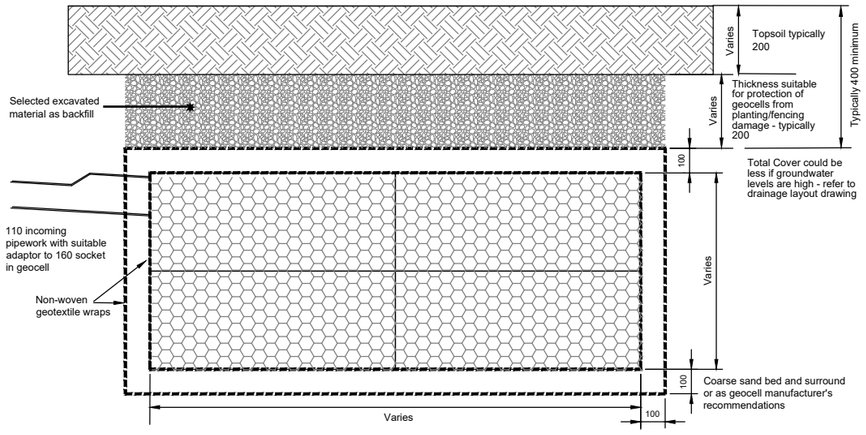


# Surface Water Chamber & Soakaway Constructional Details scale 1:25

Mate GeoTechnic Services

| Rev. | Description | Drn. | Date |
|---|---|---|---|
| | | | |
| | | | |
| | | | |
| 02 | Permeable Structure added | RC | 13-3-21 |
| 01 | Original | RC | 6-03-21 |

Project
Proposed New Build
#47 South Way
North Bersted
Bognor Regis
BN18 0PB

Client: Mr P. Nicol

Drawing Title: Constructional Details

This drawing is copyright.
It may not be copied or reproduced without written consent.

Scale: As Shown | Drawing Original: A3

Drawing Number: MGS -- BE/43/20-rev02