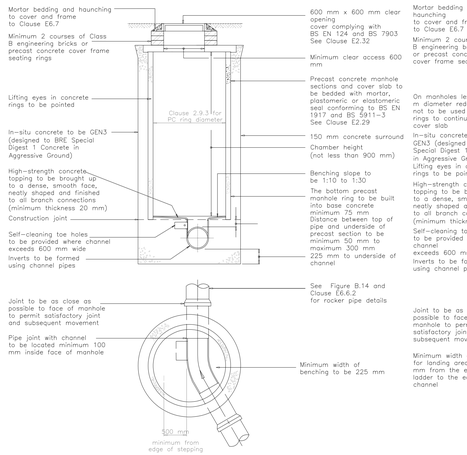

TYPICAL MANHOLE DETAIL – TYPE B
FIGURE 2.4
MAXIMUM DEPTH FROM COVER LEVEL TO SOFFIT OF PIPE 3M

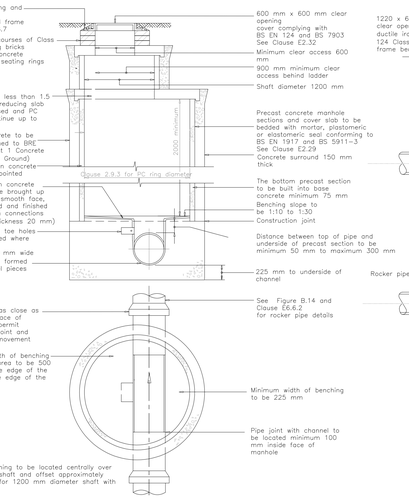

Note: Opening to be located centrally over 900 mm shaft and offset approximately 200 mm for 1200 mm diameter shaft with ladder

TYPICAL MANHOLE DETAIL – TYPE A
FIGURE 2.5
DEPTH FROM COVER LEVEL TO SOFFIT OF PIPE 3M TO 6M

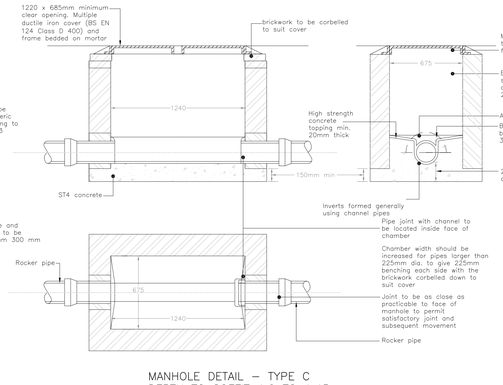

MANHOLE DETAIL – TYPE C
DEPTH TO SOFFIT 1.0 TO 1.45m
FIGURE 2.6

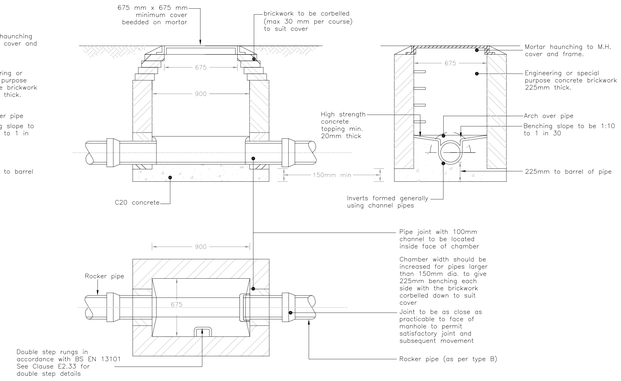

MANHOLE DETAIL – TYPE D
DEPTH TO SOFFIT < 1.0m
FIGURE 2.7

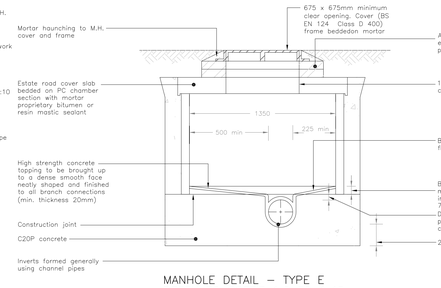

MANHOLE DETAIL – TYPE E
DEPTH TO SOFFIT 1.0 TO 1.45m
FIGURE 2.8

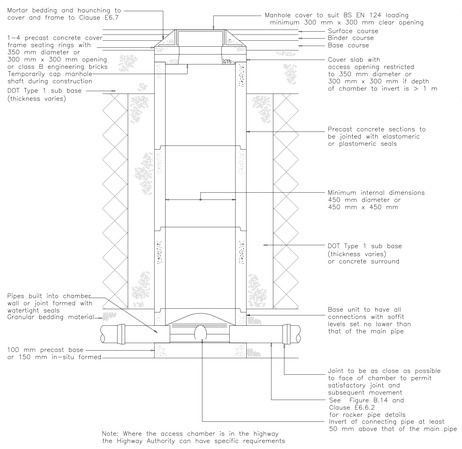

Note: Where the access chamber is in the highway the Highway Authority can have specific requirements

TYPICAL INSPECTION CHAMBER DETAIL – TYPE 3
(RIGID MATERIAL DETAIL) FIGURE 7
MAXIMUM DEPTH FROM COVER LEVEL TO SOFFIT OF PIPE IN AREAS SUBJECT TO VEHICLE LOADING 3M, NON–ENTRY

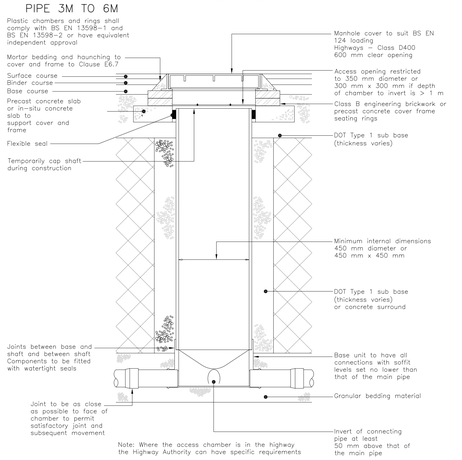

Note: Where the access chamber is in the highway the Highway Authority can have specific requirements

TYPICAL INSPECTION CHAMBER DETAIL – TYPE 3
(FLEXIBLE MATERIAL DETAIL) FIGURE 6
MAXIMUM DEPTH FROM COVER LEVEL TO SOFFIT OF PIPE IN AREAS SUBJECT TO VEHICLE LOADING 3M, NON–ENTRY

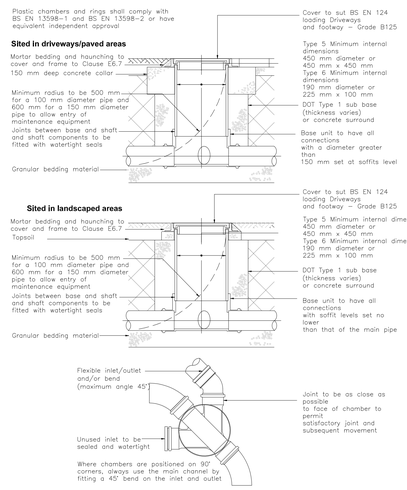

Note: Where the access chamber is in the highway the Highway Authority can have specific requirements

TYPICAL INSPECTION CHAMBER DETAIL – TYPE 5 & 6
(FLEXIBLE MATERIAL DETAIL) FIGURE 10
MAXIMUM DEPTH FROM COVER LEVEL TO SOFFIT OF PIPE 2M, NON–ENTRY

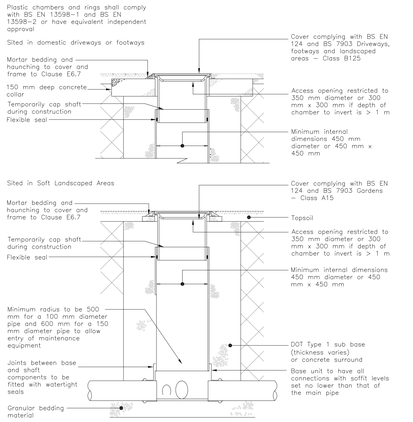

TYPICAL INSPECTION CHAMBER DETAIL – TYPE 4
(FLEXIBLE MATERIAL DETAIL) FIGURE 8
MAXIMUM DEPTH FROM COVER LEVEL TO SOFFIT OF PIPE FOR AREAS NOT SUBJECT TO VEHICLE LOADING OR AREAS SUBJECT TO LIGHT VEHICLE LOADING 3M, NON–ENTRY

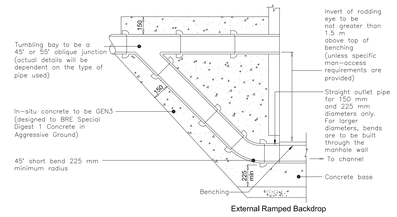

EXTERNAL RAMPED BACKDROP
TYPICAL VERTICAL AND RAMPED BACKDROP DETAIL
FIGURE 2.10

Note: Steeper gradients are preferred to the use of backdraps.
Type of backdrop to be used to be agreed with Undertaker.

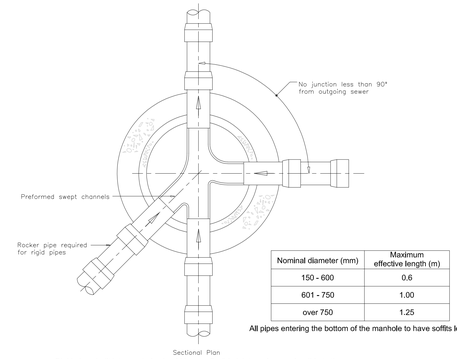

Nominal diameter (mm)	Maximum effective length (m)
150 - 600	0.6
601 - 750	1.00
over 750	1.25

All pipes entering the bottom of the manhole to have soffits level.

Rigid pipes built into manhole should have a flexible joint as close as feasible to the external face of the structure and the length of the next rocker pipe should be as shown.

TYPICAL ARRANGEMENT OF PIPE JUNCTIONS WITHIN MANHOLES
FIGURE 2.9

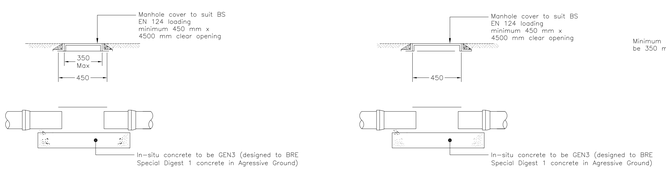

TYPICAL DEMARCATION CHAMBER DETAIL –
FIGURE 2.14
DEPTH OF COVER LEVEL TO INVERT OF PIPE CHAMBER GREATER THAN 1.2M.
MAXIMUM LATERIAL DRAIN DIAMETER 150MM

TYPICAL DEMARCATION CHAMBER DETAIL –
FIGURE 2.15
DEPTH OF COVER LEVEL TO INVERT OF PIPE CHAMBER GREATER THAN 1.2M.
MAXIMUM LATERIAL DRAIN DIAMETER 150MM

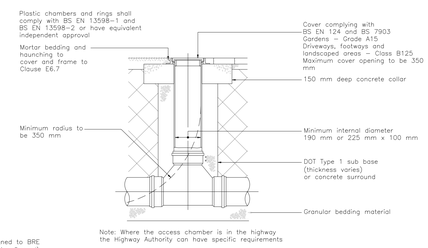

TYPICAL INSPECTION CHAMBER DETAIL – TYPE 7
FIGURE 12
MAXIMUM DEPTH FROM COVER LEVEL TO SOFFIT OF PIPE 2M, NON–ENTRY

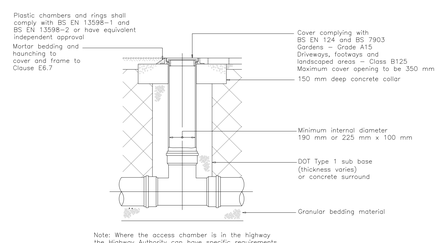

TYPICAL INSPECTION CHAMBER DETAIL – TYPE 8
FIGURE 13
MAXIMUM DEPTH FROM COVER LEVEL TO SOFFIT OF PIPE 0.6M, NON–ENTRY

JOINTS FOR CONCRETE ENCASED PIPES

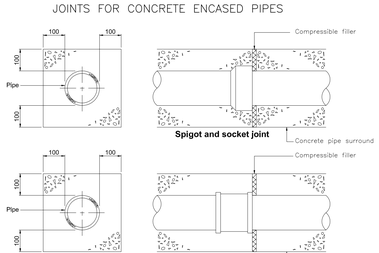

PROTECTION OF PIPES PENETRATING SINGLE LEAF BOUNDARY WALLS

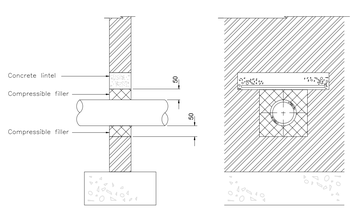

Not to scale, dimensions in millimetres

GRANULAR BEDDING & SURROUND

Granualr bedding for pipes shall comply with Cl 2.88 of CESWR, sized in accordance with the following table:

Nominal Bore of Pipe (mm)	Alternative Aggregate Sizes (mm)		CF Value Max
	Single-Sized	Graded	
100–150	10	–	0.2
225–300	10 or 14	14 to 5	0.2
375–525	10,14 or 20 14 or 20	14 to 5 or 20 to 5	0.2
Exceeding	14,20 or 40	14 to 5 or 20 to 5	0.15
		14 to 5, 20 to 5 or 40 to 5	0.5

PIPE BEDDING DETAILS

PIPE DIA	TRENCH WIDTH Tw
150	600
225	700
300	750
375	1050
450	1150
525	1200
600	1350
675	1450
750	1500
825	1600
900	1900
1050	2050
1200	2300

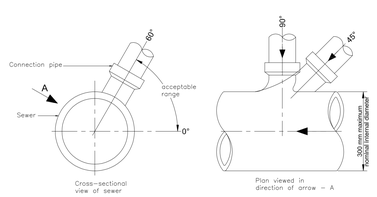

CONNECTIONS TO SEWER

BACKFILL TO TRENCHES

- Backfill within highways and paved areas shall be backfilled in accordance with local highway authority requirements or H.A.U.C. Specification for the reinstatement of Highways Appendix 1.
- Backfill outside hard areas shall be in accordance with the Specification for Highway Works Clause 505 Class 1, 2 or3. Material shall be placed and compacted in layers.

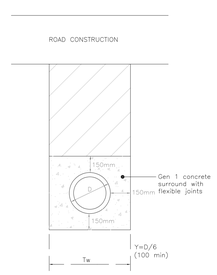

CONCRETE SURROUND

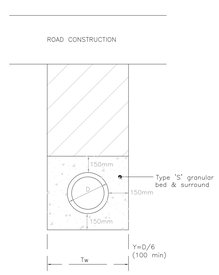

TYPE S

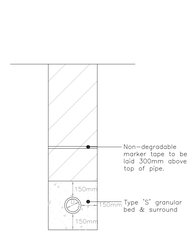

RISING MAIN

GENERAL NOTES:

1. This drawing to be read in conjunction with all other engineering details.
2. All Section 104 work shall be in accordance with the document 'Sewers for Adoption' as published by WRc plc, The Civil Engineering Specification to the Water Industry and the Water Authorities requirements.
3. All adoptable works to be checked by Southern Water Authority inspector.
4. Non–Slip covers to be specified on manholes located in carriageway on bends.

PRELIMINARY

REV. No.	DATE	DESCRIPTION	INITIALS

Client: Linden Homes

Project: New Barn Lane, North Bersted

MJA CONSULTING
CIVIL AND STRUCTURAL ENGINEERS
Monarch House, Barton Lane, Abingdon, Oxon, OX14 3NB
Tel: 01235 555173
Fax: 01235 523226

Title	Scale	Date	Drawing No.	Rev
Sewer Construction Details: 99 Unit Scheme (Alternative Application)	As shown@A0	Dec 2017	LHS232–4021	–
	Checked KTG	Drawn TDF		

© This drawing is the copyright of Michael A Jennings Associates Limited and may not be copied, altered or reproduced in any way without their permission.

WWW.SANTRACI.COM/CIL BIRDWATCH