NOTE THAT TUBOSIDER "TWINSTORE * " ATTENUATION SYSTEM HAS UK PATENTS - No 2461142 & No 2469770

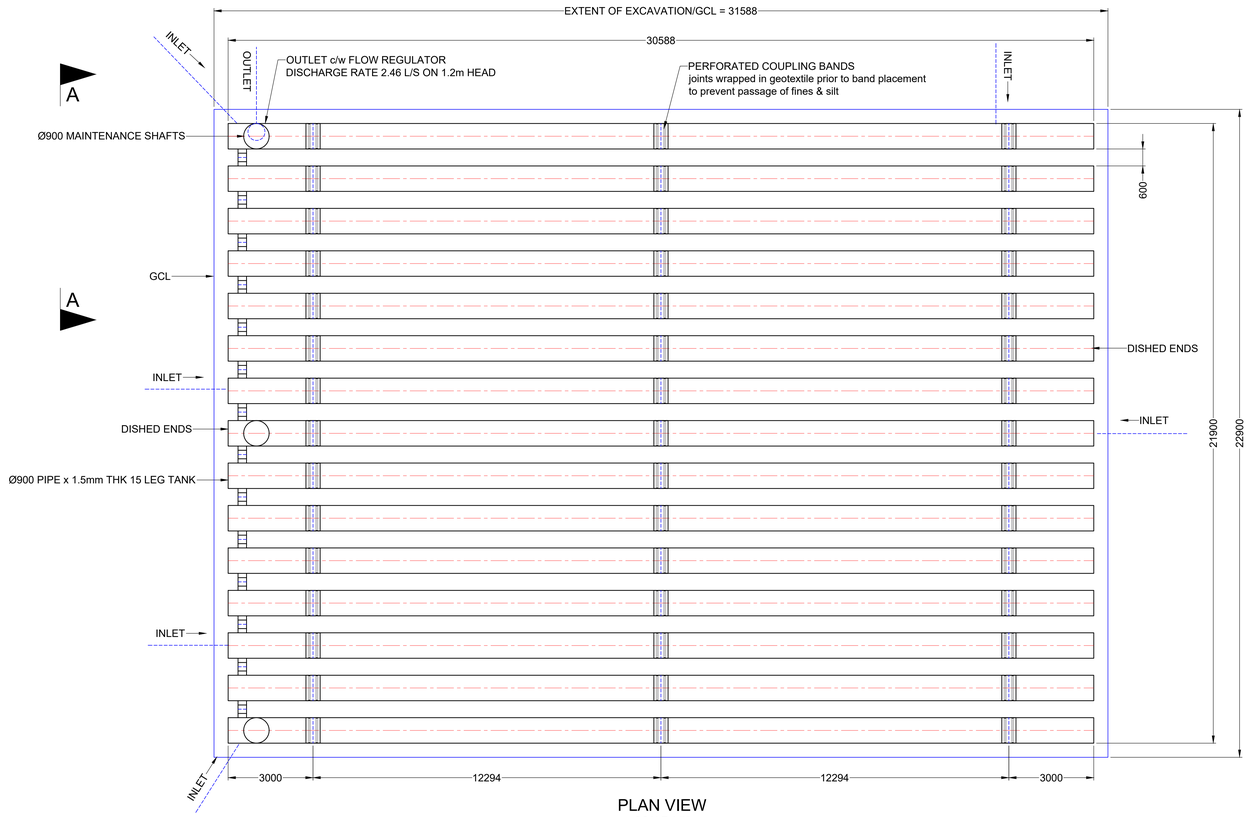

PLAN VIEW
SCALE 1:75

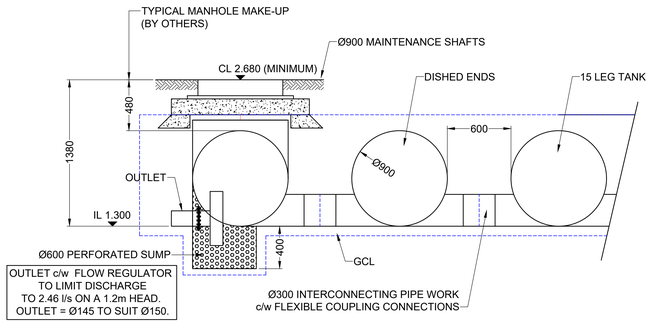

END SECTION THROUGH
OUTLET VIEWED A-A
SCALE 1:20

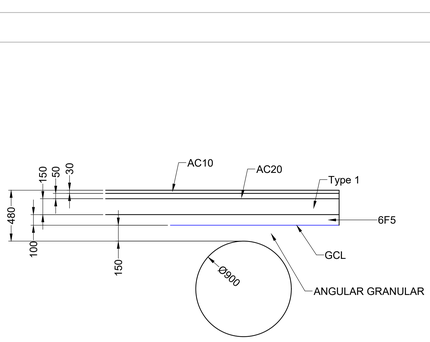

ABOVE PIPE MAKE - UP
SCALE 1:20

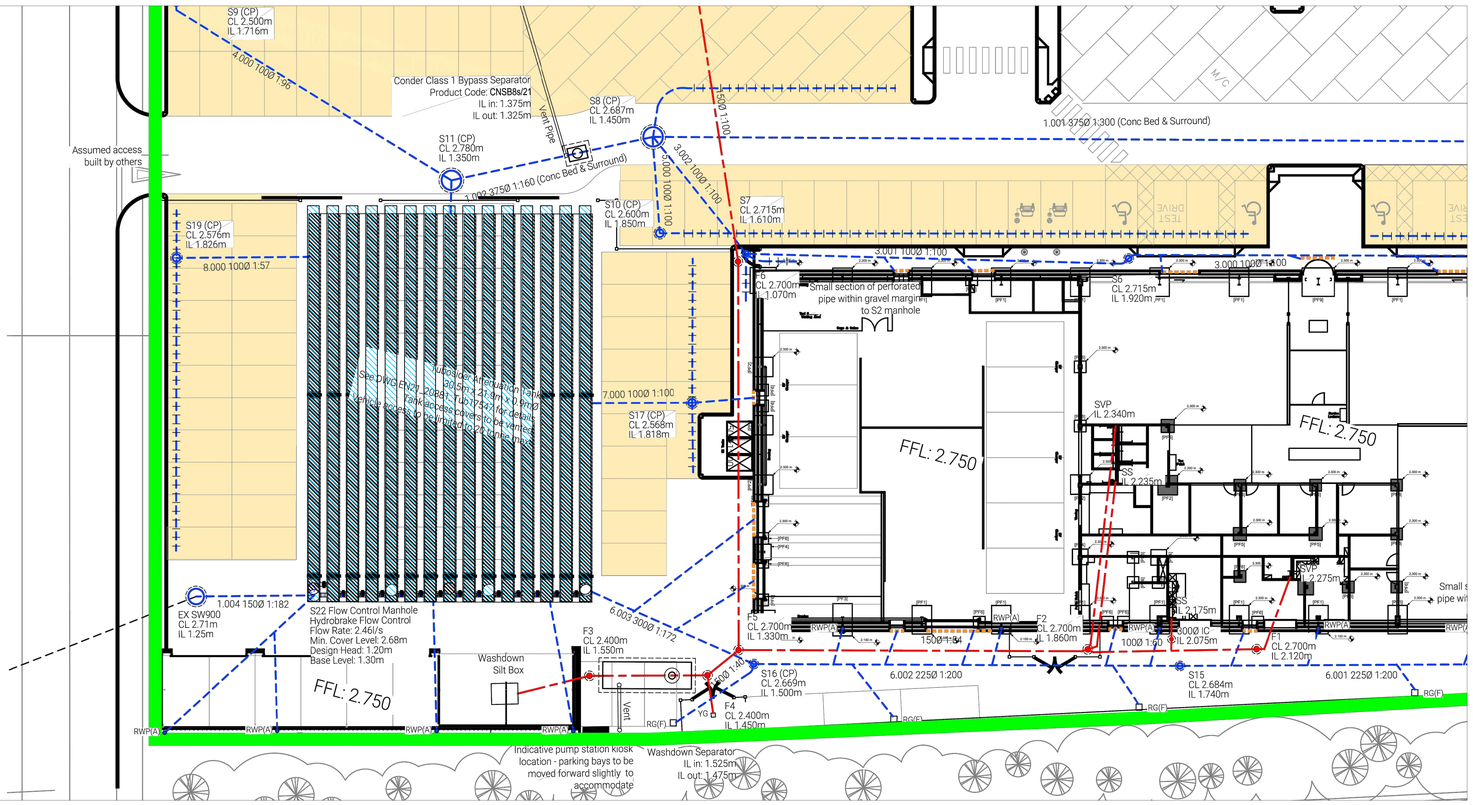

NOTES:
1. INLETS/OUTLET CAN BE POSITIONED TO SUIT REQUIREMENTS

Rev.	Date	Drawn	Description
A	4.03.22	MR	Amend Layout & Volume
-	19.01.22	MR	Sales Drawing

TITLE
Tubosider Tank For
Saltbox Bognor Regis

Cubic Capacity = 480m3
EN21_20881

SCALE @ A0	TUBOSIDER DRAWING No.	REV.	SHEET
AS SHOWN	EN21_20881_TUB17547_A		1

TUBOSIDER UNITED KINGDOM LTD
A PART OF VIACON

10 SUTTON FOLD,
ST HELENS,
MERSEYSIDE,
WA9 3GL

TEL: 01744 452900
Fax: 01744 452949
Website: www.tubosider.co.uk
Email: sales@tubosider.co.uk

COPYRIGHT, DESIGNS & PATENTS ACT 1988. THIS DRAWING IS THE SOLE PROPERTY OF TUBOSIDER UNITED KINGDOM LIMITED & SHALL NOT BE REPRODUCED, COPIED IN WHOLE OR PART, NOR GIVEN, LOANED OR DISCLOSED TO ANY THIRD PARTY WITHOUT THE WRITTEN CONSENT OF TUBOSIDER UNITED KINGDOM LIMITED

*The patented Tubosider Twinstore system combines the volume of storage in the pipes, with the volume of storage in the voids of the single size stone backfill. The sum of these two volumes is the gross capacity of the system which is stored within the extents of the geosynthetic clay liner (GCL). The gross cubic capacity of this system is shown in the title block.

NOTE THAT TUBOSIDER "TWINSTORE * " ATTENUATION SYSTEM HAS UK PATENTS - No 2461142 & No 2469770

NOTE THAT TUBOSIDER "TWINSTORE * " ATTENUATION SYSTEM HAS UK PATENTS - No 2461142 & No 2469770

TWINSTORE STANDARD DETAIL

EXCAVATION AND BACKFILL REQUIREMENTS

SINGLE PIPE RUN

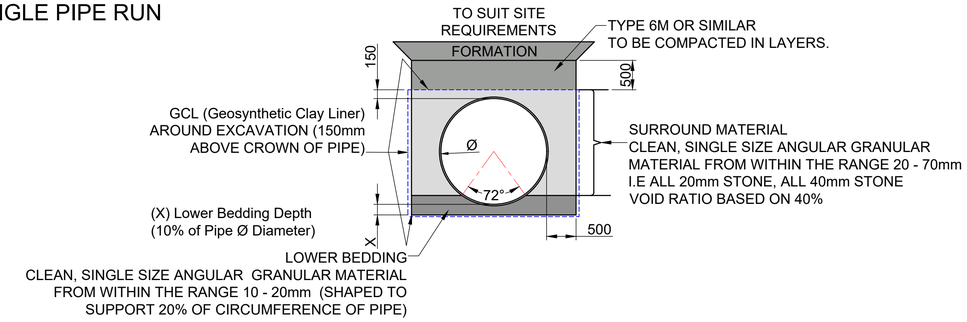

MULTIPLE PIPE RUN

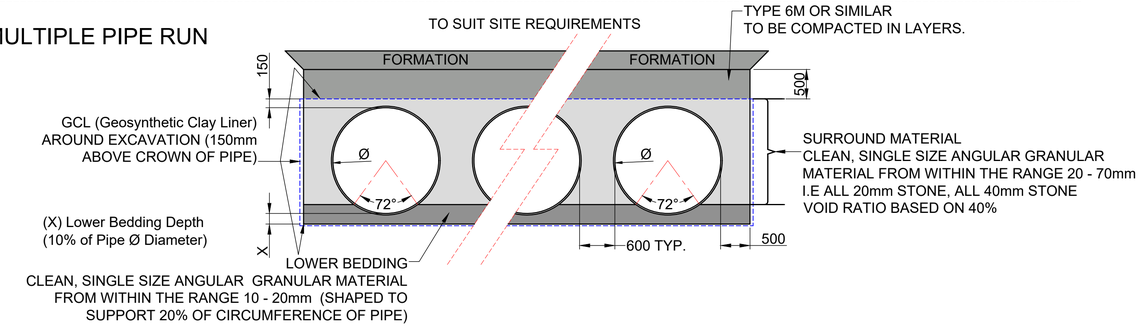

OUTLET c/w FLOW REGULATOR

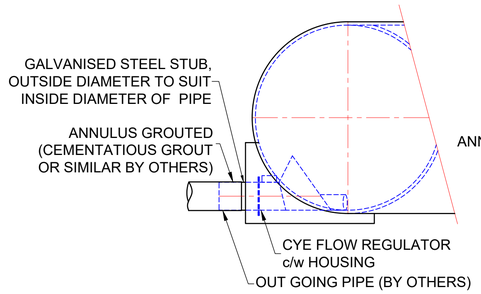

TYPICAL SECTION THROUGH OUTLET CONNECTION

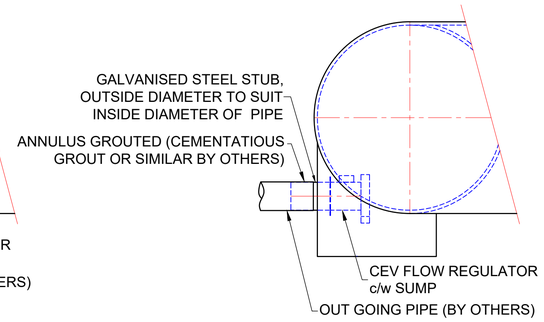

TYPICAL SECTION THROUGH OUTLET CONNECTION

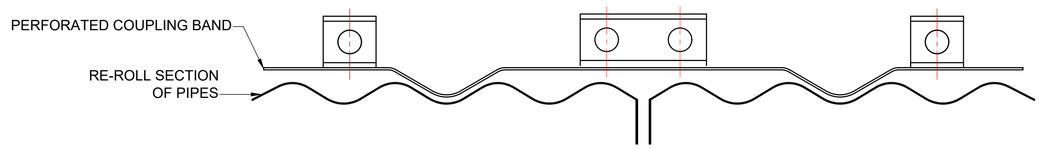

SECTION THROUGH PERFORATED COUPLING BAND

OPTION 1 - PUSH IN AND GROUT

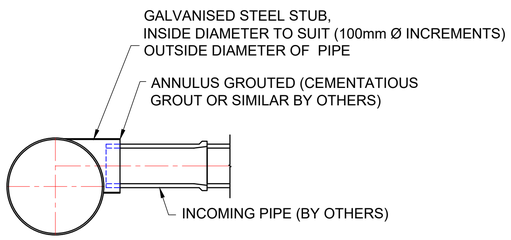

TYPICAL SECTION THROUGH INLET CONNECTION

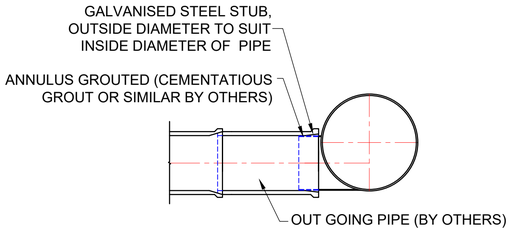

TYPICAL SECTION THROUGH OUTLET CONNECTION

OPTION 2 - FLEXIBLE COUPLING BAND

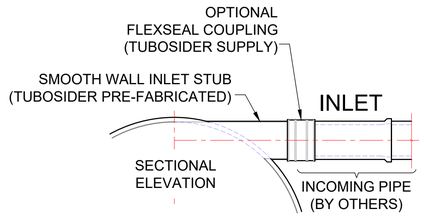

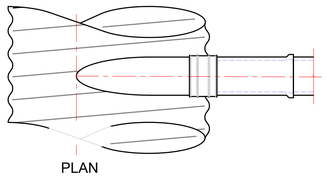

FLEXIBLE BAND DETAIL

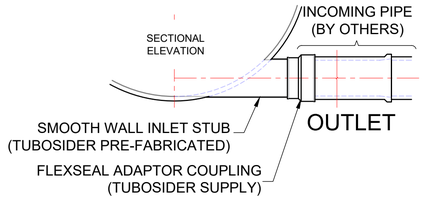

TYPICAL MAINTENANCE,ACCESS AND PUMP CHAMBER SHAFT FINISHING DETAIL

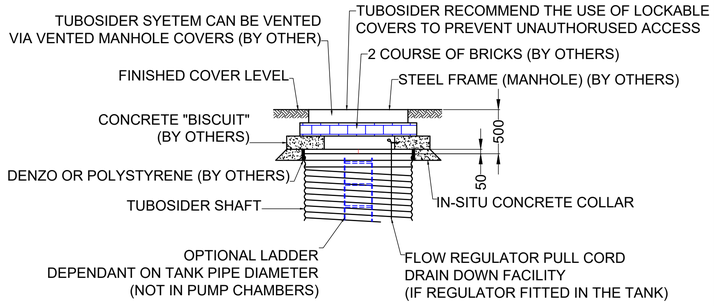

NOTES:
1. When calculating shaft heights Tubosider allow 500mm between finished cover level (FCL) and top of shaft.
2. The 500mm is typically made up of a concrete "biscuit" 2 courses of bricks and a steel manhole frame. Any discrepancy in levels can be taken up within the brickwork
3. Prior to placing the "biscuit" the top of the shaft should be wrapped with denzo or polystyrene and the concrete ring should be cast with the top approximately 50mm above the top of the shaft (the shaft must not become load bearing). The "biscuit" should then be bedded onto the concrete ring with sand and cement mortar.
4. Concrete "biscuit", bricks,cover and frame supplied by others.

Rev.	Date	Drawn	Description
A	4.03.22	MR	Amend Layout & Volume
-	19.01.22	MR	Sales Drawing

TITLE
Tubosider Tank For
Saltbox Bognor Regis

Cubic Capacity = 480m3
EN21_20881

SCALE @ A0	TUBOSIDER DRAWING No.	REV.	SHEET
AS SHOWN	EN21_20881_TUB17547_A		2

TUBOSIDER UNITED KINGDOM LTD
A PART OF VIACON
10 SUTTON FOLD, ST HELENS, MERSEYSIDE, WA9 3GL
TEL: 01744 452900
Fax: 01744 452949
Website: www.tubosider.co.uk
Email: sales@tubosider.co.uk

*The patented Tubosider Twinstore system combines the volume of storage in the pipes, with the volume of storage in the voids of the single size stone backfill. The sum of these two volumes is the gross capacity of the system which is stored within the extents of the geosynthetic clay liner (GCL). The gross cubic capacity of this system is shown in the title block.

COPYRIGHT, DESIGNS & PATENTS ACT 1988. THIS DRAWING IS THE SOLE PROPERTY OF TUBOSIDER UNITED KINGDOM LIMITED & SHALL NOT BE REPRODUCED, COPIED IN WHOLE OR PART, NOR GIVEN, LOANED OR DISCLOSED TO ANY THIRD PARTY WITHOUT THE WRITTEN CONSENT OF TUBOSIDER UNITED KINGDOM LIMITED.

NOTE THAT TUBOSIDER "TWINSTORE * " ATTENUATION SYSTEM HAS UK PATENTS - No 2461142 & No 2469770

ARUN DISTRICT COUNCIL BE/20/22/DOC