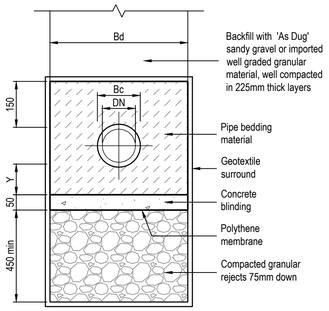

Enhanced Class 'S' Bedding Detail (Granular Bed & Surround)

SCALE = 1:10

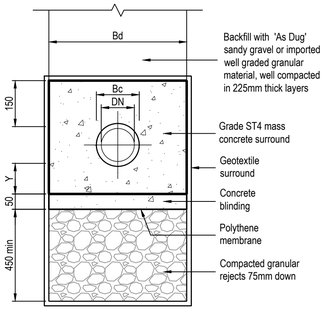

25mm expansion joint material to full area of concrete bed & surround at all pipe joints

Final formation to be dished to give full depth of concrete bed around pipe collar

Enhanced Class 'Z' Bedding Detail (Concrete Bed & Surround)

SCALE = 1:10

Note: Enhanced bedding details only to be used within areas of poor ground.

Nominal maximum aggregate size (mm) B.S. 882 Grading		
Pipe bore (mm)	Aggregate	Bedding class S – B
100	Single size graded	10 --
150	Single size graded	10 or 14 14 to 5
225	Single size graded	10, 14 or 20 14 to 5 or 20 to 5
300	Single size graded	10, 14 or 20 14 to 5 or 20 to 5
375	Single size graded	14 or 20 14 to 5 or 20 to 5

Nominal internal Ø DN (mm)	Assumed external Ø Bc (mm)	Assumed max. permissible trench width Bd (mm)	Dimension 'Y' for uniform soils
100	130	550	100
150	190	600	100
225	280	700	100
300	388	750	125
375	500	1050	125

Pipe Bedding Tables

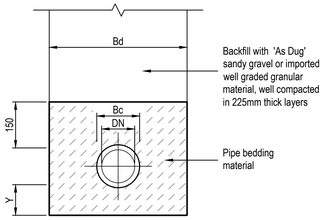

Class 'S' Bedding Detail (Granular Bed & Surround)

SCALE = 1:10

Note - For use on all pipework with:
More than 0.6m of cover in all landscaped and pedestrianised areas.
More than 1.2m of cover in all trafficked areas.

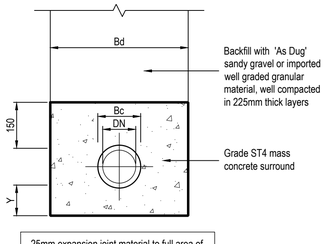

25mm expansion joint material to full area of concrete bed & surround at all pipe joints

Final formation to be dished to give full depth of concrete bed around pipe collar

Class 'Z' Bedding Detail (Concrete Bed & Surround)

SCALE = 1:10

Note - For use on all pipework with:
Less than 0.6m of cover in all landscaped and pedestrianised areas.
Less than 1.2m of cover in all trafficked areas.

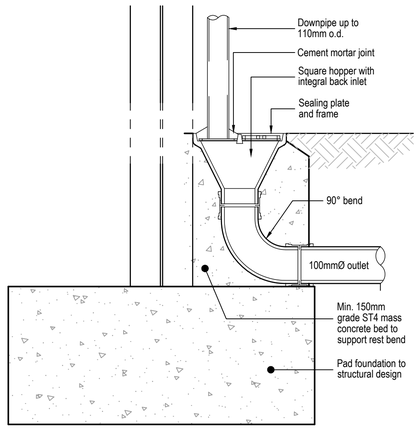

Roddable RWP Connection Detail

SCALE = 1:10

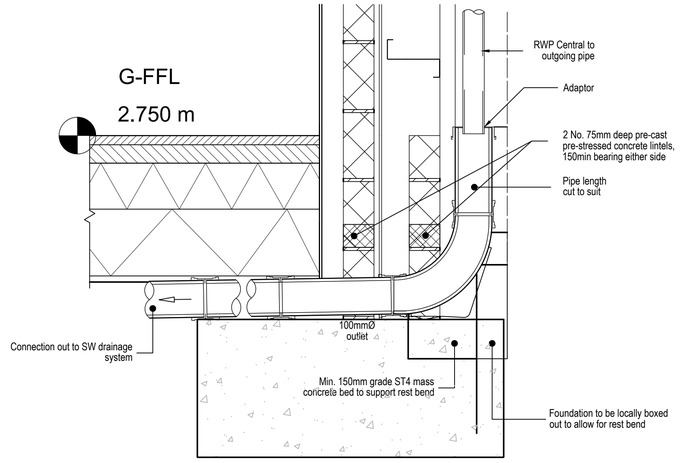

Non-Roddable RWP Connection through Valet Detail Scale 1:10

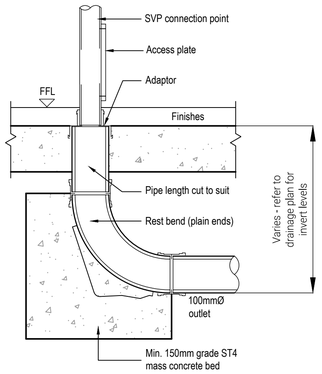

Roddable Internal SVP Detail

SCALE = 1:10

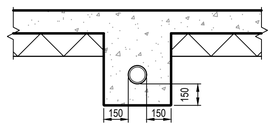

Section A-A

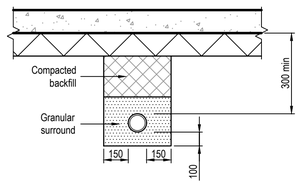

Section B-B

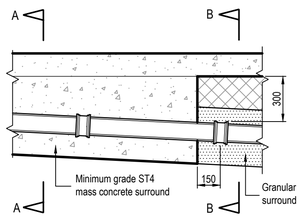

Pipework Under Slabs

SCALE = 1:20

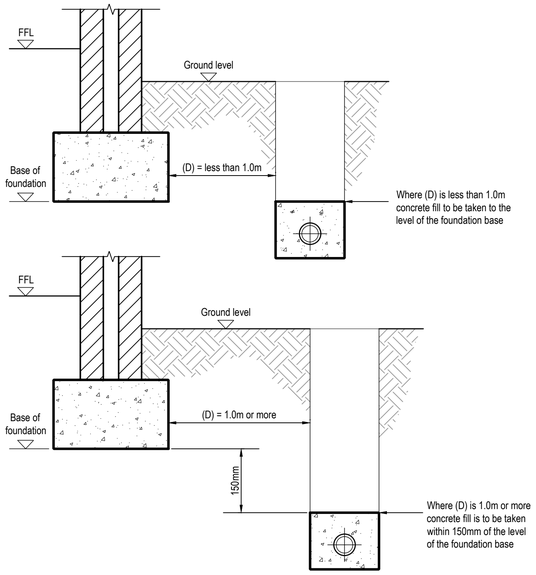

Protection of Pipes Adjacent to Building Detail

SCALE = 1:20

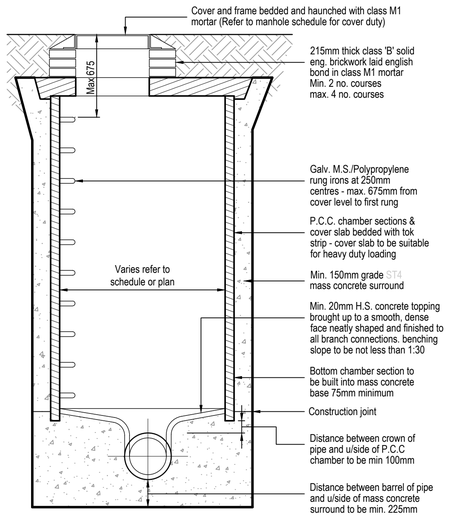

Type B Manhole Section Detail

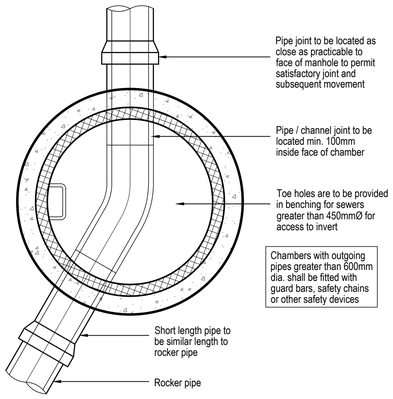

Type B Manhole Base Detail

Type B - P.C.C Ring Manhole Detail (Depth to Soffit = 3.0m Max.)

SCALE = 1:25

Notes:

1. This drawing is to be read in conjunction with all relevant architects, engineers and specialist sub-contractors drawings and the specification.

2. All setting out to be in accordance with the schedules. any discrepancies between the engineers and the architects drawings to be referred to the architect before proceeding. Dimensions must not be scaled.

3. All private drainage is to be in accordance with BS EN 752-1-2-3-4, BS EN 1295-1, BS EN 1610 and all relevant sections of approved document H of the building regulations (2015 Edition).

4. Where drainage pipework is to be flexibly jointed extra strength vitrified clay it should be to BS EN 295-1, Hepworth 'Supersleve' or equivalent.

5. Where drainage pipework is plastic i.e. PVC-U it shall be to BS EN 1401-1 Osma or equivalent. Private pipework to be type SN4 and all adoptable pipework to be type SN8.

6. Where drainage pipework is cast iron it shall be to BS EN 877 and for ductile iron it shall be to BS EN 598.

7. All concrete pipework, shall be to BS EN 1916 and BS 5911-1. Manholes and fittings shall be to BS 5911 parts 3 and 4 and BS EN 1917.

8. All materials for adoptable drainage are to be Kitemarked as appropriate.

9. Where drains pass through foundations or connect to manholes, flexible pipe joints are to be provided within 150mm of the face of the structure and within a further 600mm to form a rocker pipe.

10. Where pipes pass through screen walls, footings or retaining walls, lintels are to be provided.

11. Where pipelines pass within 1.0m of buildings or walls the foundations are to be taken down below the bottom of the trench. Where pipelines are more than 1.0m away from foundations the trench shall be backfilled with concrete up to a point that meets a 45° angle line taken from the bottom corner of the nearest foundation.

12. Where depth to invert does not exceed 600mm and the pipe size does not exceed 100mm diameter, 300mm dia. polypropylene access chambers may be used. Elsewhere, proprietary polypropylene or precast concrete manholes are to be used.

13. Where connections are to be made to existing manholes / sewers, invert levels, pipe sizes and orientation should be checked prior to the commencement of the works and any variance reported to the engineer immediately. Where connections are to be made on or off site the contractor is to check the line and level of any services / mains, to ensure that no clashes exist prior to works commencing.

14. Where pipelines cross, each is to be surrounded with grade ST4 mass concrete for a distance not less than 1.0m centred on the crossing point. Length of surround to be extended as necessary to within 150mm of the next nearest flexible joints.

15. For private drainage, concrete protection is to be provided where the effective cover to the crown of the pipe(s) is less than 1.2m in trafficked areas and 0.6m in soft landscaped or pedestrianised areas.

16. The contractor is to ensure that protective measures are taken to ensure that drainage pipework and fittings are not damaged by site traffic prior to oversite filling operations being completed around buildings.

17. The top run of each private foul drainage network is to be laid to falls no slacker than 1:40. the head of each run is to be vented to atmosphere in accordance with approved document H.

18. All surface water drainage to be min 100mm dia, laid at a gradient no slacker than 1/80. And all foul water drainage to be min 100mm dia. unless stated otherwise.

19. The contractor is to ensure that all pipework connections are arranged to direct flows down or into the main channel in the direction of the main flow. Where necessary 3/4 bends are to be used on oblique connections inside the manhole benching where sufficient room exists or the pipelines on oblique connections are arranged outside the chamber to be able to divert flows down the main channel. Connections brought in perpendicular to the main channel are not acceptable. Where possible the main channel flow shall be from any connections with WC's to ensure a flush through the main channel is achieved.

20. The contractor is to ensure that when preformed polypropylene manhole bases are used that they are orientated such that the main flow is through the main channel of the base. this should be achieved by incorporating long radius bends outside of the manhole.

21. The contractors attention is drawn to the need to ensure that any trenches excavated through previously compacted filled areas, in particular under the building footprint and immediately around the outside, are re-compacted to ensure localised differential settlement does not occur.

22. Where new connections are to be made into existing manholes or sewers, all invert levels, pipe orientation and sizes should be checked on-site prior to the commencement of the works, with any variance reported to the engineer once identified. Where new connections are to be made either on or off-site, the contractor is to check the line and level of any existing services / mains, to ensure that no clashes exist prior to the works commencing.

23. Porous paving surface finish 'to the architects spec'. Any alteration to the extents of the porous paving may have an adverse affect upon the Surface water drainage design and must therefore be discussed with the engineer.

24. For bespoke attenuation tank detail, please refer to Tubosider detail EN21_20881_Tub17547 and accompanying design information. Tubosider tank to be installed to manufacturers instructions.

Rev.	Date	Description
B	15.03.22	Rising main detail removed. 375mm pipe details added.
A	31.01.22	Construction Issue

Calicinotto
Jansen House
43 Commercial Rd
Poole BH14 0HU
01202 237237
info@calicinotto.co.uk
www.calicinotto.co.uk

Client
RICHMOND MOTOR GROUP

Project Title
Saltbox

Drawing Title
Construction Details

Sheet 2 of 5

Drawing Status
Construction

Originator No.	Rev by	Chk by	Scale
114378	DB	PW	As Shown

PROJECT | ORIGINATOR | ZONE | LEVEL | TYPE | ROLE | NO.
114378-CAL-XX-XX-DR-D-0501

Revision
B

ARUN DISTRICT COUNCIL BE/20/22/DOC