Technical Specification

Control Point	Head (m)	Flow (l/s)
Primary Design	0.950	1.800
Flush-Flo™	0.282	1.764
Kick-Flo®	0.574	1.433
Mean Flow		1.562

Hydro-Brake® Optimum Flow Control including:

- 3 mm grade 304L stainless steel
- Integral stainless steel pivoting by-pass door allowing clear line of sight through to outlet, c/w stainless steel operating rope
- Beed blasted finish to maximise corrosion resistance
- Stainless steel fixings
- Rubber gasket to seal outlet

BBA APPROVAL INSPECTION TESTING CERTIFICATION
CERTIFICATE 08/4596

WRc Approved
PT/329/0412

hydro-int.com/patents

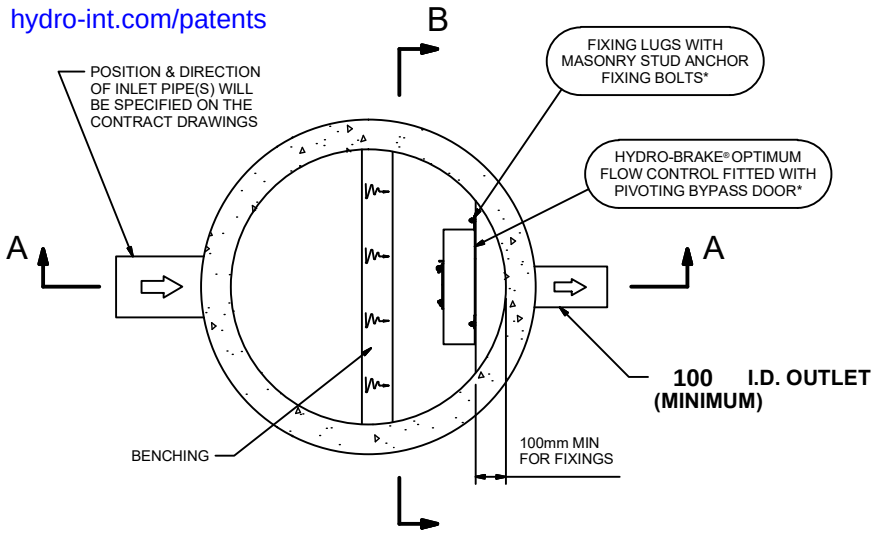

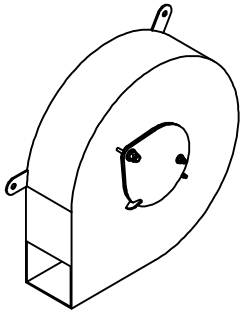

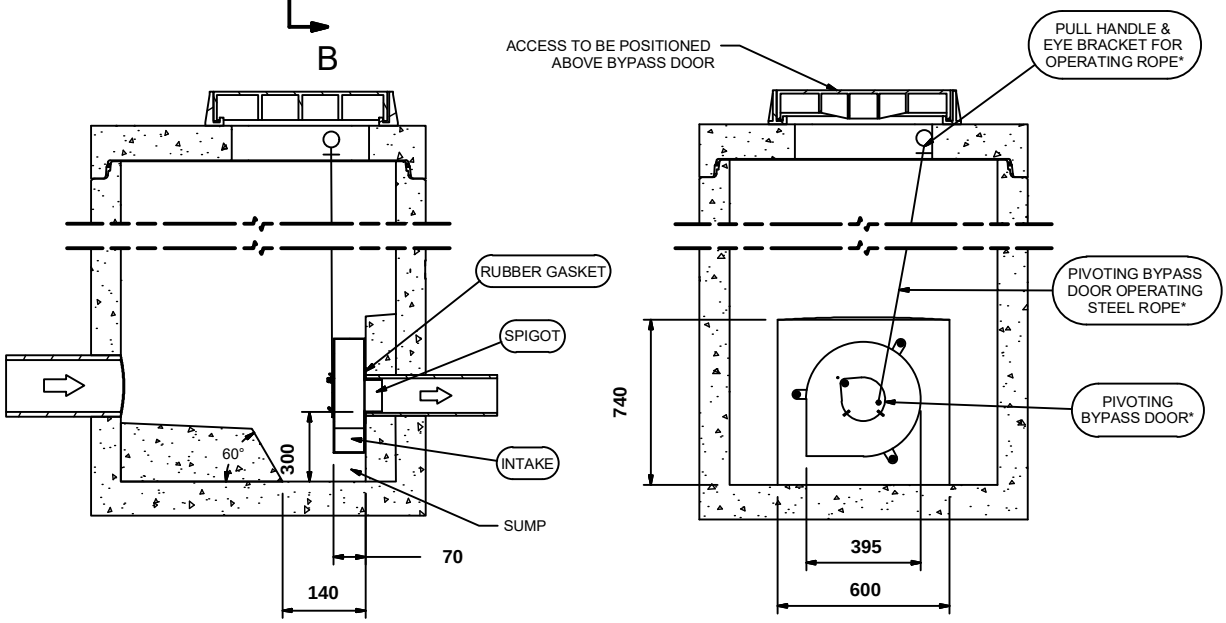

SECTION A-A

SECTION B-B

IMPORTANT: ⬭ LIMIT OF HYDRO INTERNATIONAL SUPPLY
THE DEVICE WILL BE HANDED TO SUIT SITE CONDITIONS
FOR SITE SPECIFIC DETAILS AND MINIMUM CHAMBER SIZE REFER TO HYDRO INTERNATIONAL
ALL CIVIL AND INSTALLATION WORK BY OTHERS
* WHERE SUPPLIED
HYDRO-BRAKE® FLOW CONTROL & HYDRO-BRAKE® OPTIMUM FLOW CONTROL ARE REGISTERED TRADEMARKS FOR FLOW CONTROLS DESIGNED AND MANUFACTURED EXCLUSIVELY BY HYDRO INTERNATIONAL

THIS DESIGN LAYOUT IS FOR ILLUSTRATIVE PURPOSES ONLY. NOT TO SCALE.

DESIGN ADVICE !

The head/flow characteristics of this SHE-0064-1800-0950-1800 Hydro-Brake® Optimum Flow Control are unique. Dynamic hydraulic modelling evaluates the full head/flow characteristic curve.
The use of any other flow control will invalidate any design based on this data and could constitute a flood risk.

Hydro International®

DATE	11/10/2020 12:09 PM
SITE	
DESIGNER	Huw Toner
REF	

SHE-0064-1800-0950-1800
Hydro-Brake® Optimum

© 2020 Hydro International Ltd, Shearwater House, Clevedon Hall Estate, Victoria Road, Clevedon, BS21 7RD. Tel; 01275 878371 Fax; 01275 874979 Web; www.hydro-int.com Email; enquiries@hydro-int.com

huw.toner@wsp.com