Technical Specification

Control Point	Head (m)	Flow (l/s)
Primary Design	0.550	2.100
Flush-Flo™	0.163	2.096
Kick-Flo®	0.371	1.760
Mean Flow		1.801

Hydro-Brake® Optimum Flow Control including:

- 3 mm grade 304L stainless steel
- Integral stainless steel pivoting by-pass door allowing clear line of sight through to outlet, c/w stainless steel operating rope
- Beed blasted finish to maximise corrosion resistance
- Stainless steel fixings
- Rubber gasket to seal outlet
- Indicative Weight: 10 kg

BBA APPROVAL INSPECTION TESTING CERTIFICATION CERTIFICATE 08/4596

wrc approved PT/503/0422 Valid: 01/04/2022 - 31/03/2027

hydro-int.com/patents

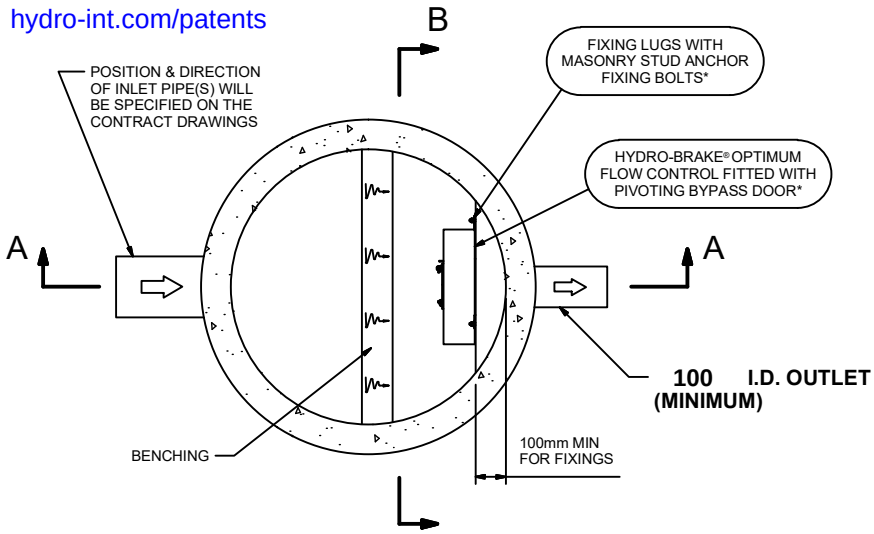

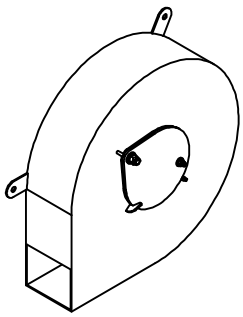

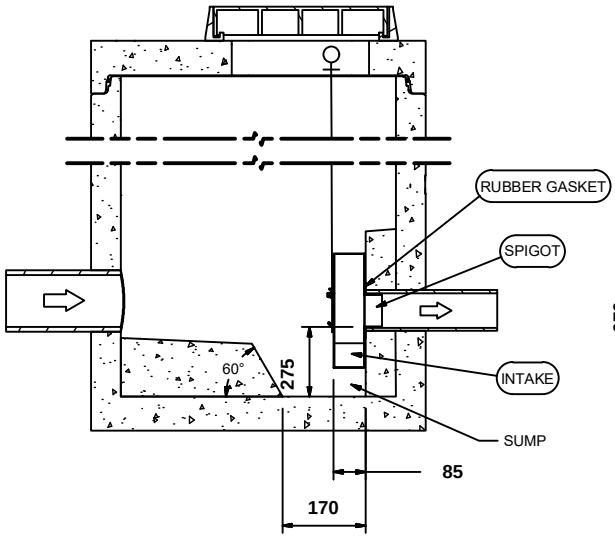

SECTION A-A

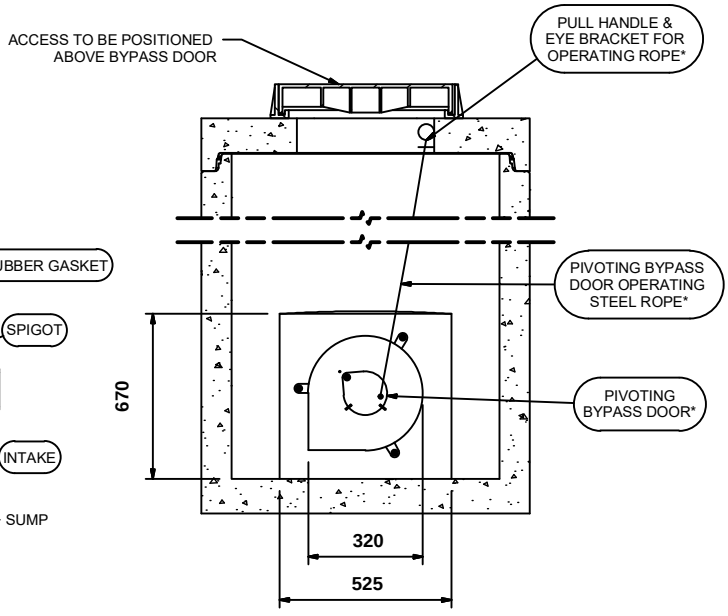

SECTION B-B

IMPORTANT: LIMIT OF HYDRO INTERNATIONAL SUPPLY
THE DEVICE WILL BE HANDED TO SUIT SITE CONDITIONS
FOR SITE SPECIFIC DETAILS AND MINIMUM CHAMBER SIZE REFER TO HYDRO INTERNATIONAL
ALL CIVIL AND INSTALLATION WORK BY OTHERS
* WHERE SUPPLIED
HYDRO-BRAKE® FLOW CONTROL & HYDRO-BRAKE® OPTIMUM FLOW CONTROL ARE REGISTERED TRADEMARKS FOR FLOW CONTROLS DESIGNED AND MANUFACTURED EXCLUSIVELY BY HYDRO INTERNATIONAL

THIS DESIGN LAYOUT IS FOR ILLUSTRATIVE PURPOSES ONLY. NOT TO SCALE.

DESIGN ADVICE

The head/flow characteristics of this SHE-0075-2100-0550-2100 Hydro-Brake® Optimum Flow Control are unique. Dynamic hydraulic modelling evaluates the full head/flow characteristic curve.
The use of any other flow control will invalidate any design based on this data and could constitute a flood risk.

Hydro International A CRH COMPANY

DATE	18/10/2023 08:50
SITE	
DESIGNER	James Oldham
REF	21-0633

SHE-0075-2100-0550-2100
Hydro-Brake® Optimum

© 2023
Hydro International Ltd • Unit 2, Rivermead Court • Kenn Business Park • Windmill Road • Kenn • Clevedon • BS21 6FT • Tel: 01275 878371 • www.hydro-int.com • Email: Enquiries@hydro-int.com

j.oldham@bsp-consulting.co.uk