jnpgroup

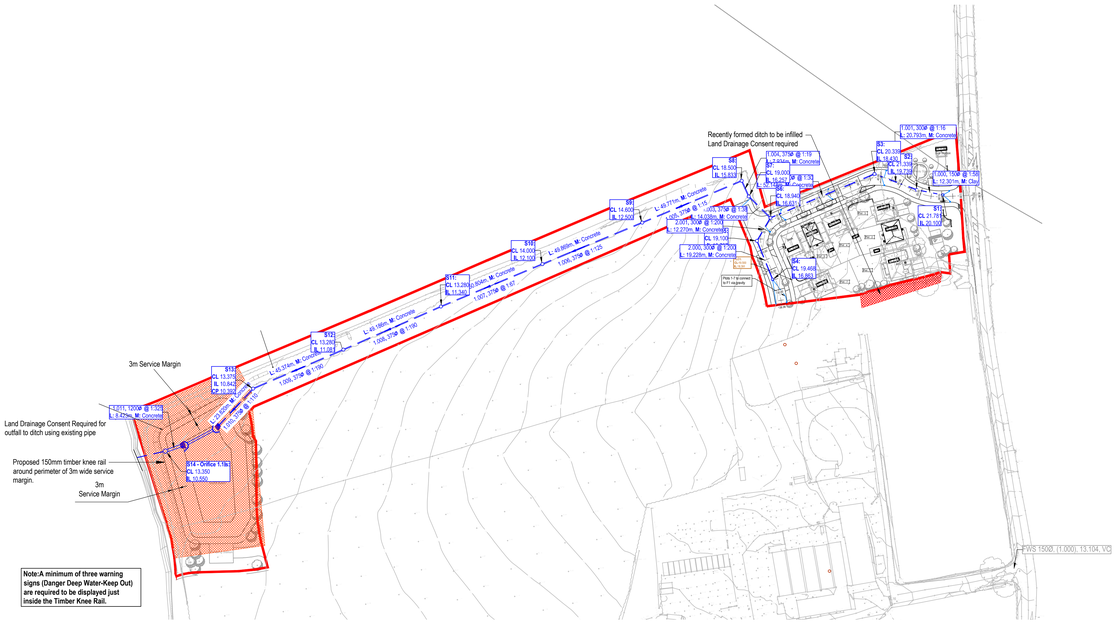

Site Plan
(Scale 1:1000)

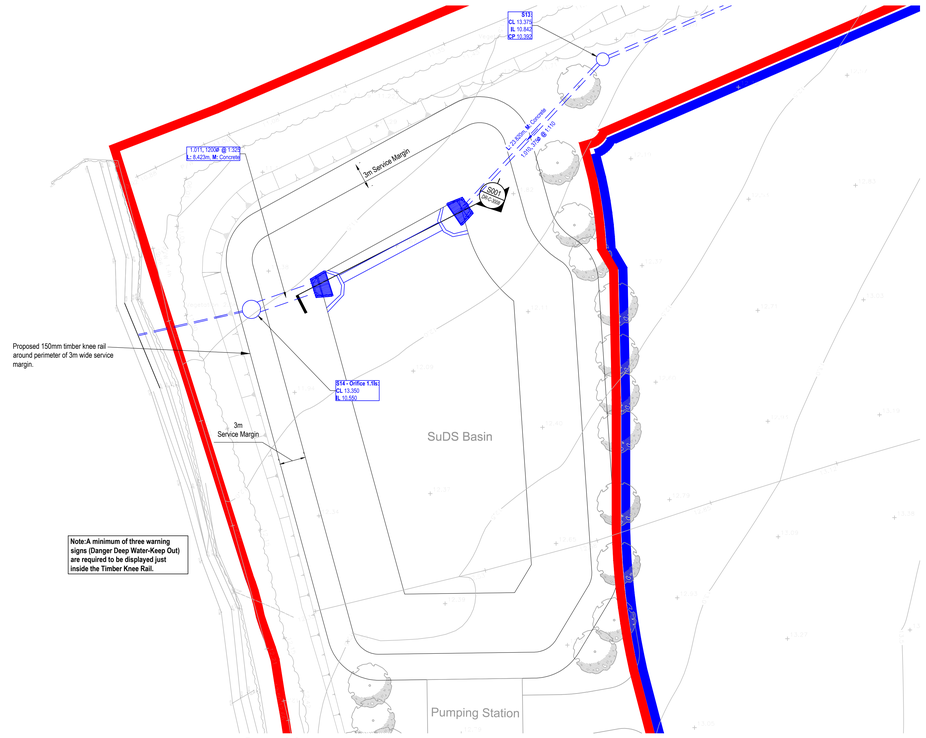

General Arrangement
(Scale 1:250)

General Notes

1. Where this drawing has been issued in electronic .dwg format it has been done so in good faith. JNP Group do not take any responsibility for any inaccuracies in the electronic data, which should be checked against the paper (or .pdf) drawing issue. Any apparent discrepancies should be immediately reported to JNP Group. The electronic .dwg file should not be assumed to be to scale and should not be used for 'overlaying', setting out or checking of any third party information. All dimensions should be taken from the paper (or .pdf) version of the drawing. Electronic drawings may contain third party information. JNP Group take no responsibility for this information, which should be checked against the originators paper drawing(s).
2. All dimensions to be checked on site prior to construction/fabrication.
3. Do not scale from this drawing.
4. Any discrepancies between drawings of different scales, and between drawings and specification where appropriate to be notified to JNP Group for decision.
5. Copyright reserved. This drawing may only be used for The Client and location specified in the title block. It may not be copied or disclosed to any third party without the prior written consent of JNP Group.
6. This drawing should only be used for construction if the drawing status is "Construction". JNP Group take no responsibility for construction works undertaken to drawings which are not marked with this status.

Health & Safety Note

The details on this drawing have been prepared on the assumption that a competent contractor will be carrying out the works. If the contractor(s) considers that there is insufficient Health and Safety information on this drawing, this should immediately be brought to the attention of the designer.

HAZARD IDENTIFICATION BOX

This table is provided to assist the Principal Contractor to fulfil their obligations under the CDM Regulations 2015

Hazard Ref	Hazard Type (Construction/Maintenance/ Cleaning/Demolition/Accident)	Hazard Description	Mitigation Measures/ Residual Risk
1			

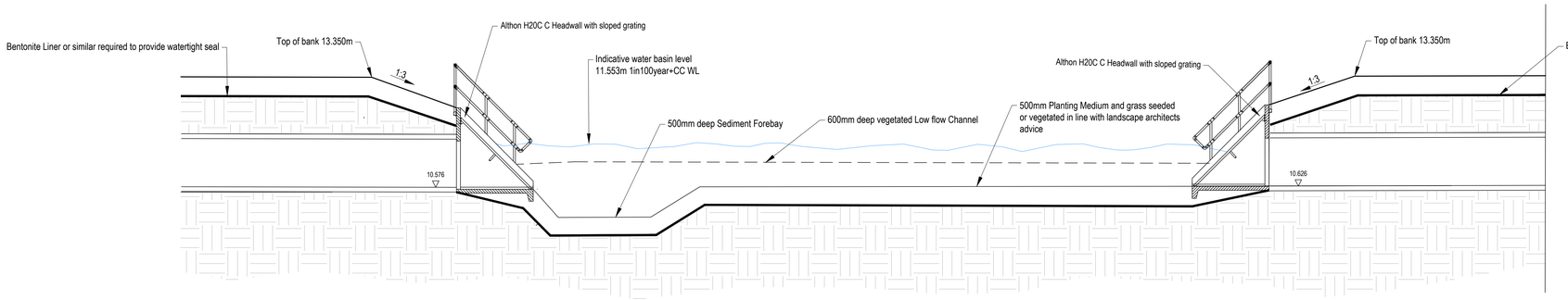

Basin Section - S001
(Scale 1:50)

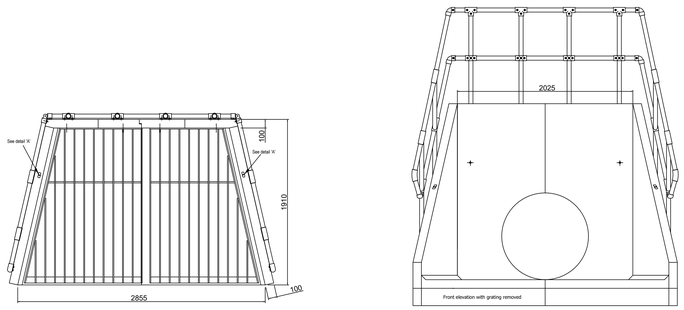

H20CC Headwall + Sloped Grating + 3 Sided Kee Klamp
(Scale 1:20)

IMPORTANT

The scheme is subject to the following Statutory Approvals:

- Section 38
- Section 104
- Building Regulations

All construction works prior to approvals above will be undertaken at the contractors risk.

Rev	Date	Description	Drn / Chk'd / Appd
P01	22/07/2022	Issued for Information.	ZS/GD/CDS/C

Suitability: S2 - Suitable for Information

Client Logo: REDROW HOMES

JNP GROUP CONSULTING ENGINEERS
Chesham ♦ Brighouse ♦ Bristol ♦ Glasgow ♦ Hartlepool ♦ Leamington Spa ♦ Sheffield
www.jnpgroup.co.uk

Client: Redrow Homes

Job: Arundel Road - 7 Unit Site
Angmering

Title: Basin, Ditch & Headwall Details

Classification: FI_60_20
Scale @ A0: As Shown

Project - Originator - Volume/System - Level/Location - Type - Discipline - Number: C86473 - JNP - 92 - XX - DR - C - 2805
Revision: P01
Document/Drawing Number

© Copyright JNP Group Ltd. 2020
JNP Group Internal Project Number: H312X

A1 Sheet Created at 100.00%