BASED ON CBR VALUES OF 3.2%, FOUND IN CBR REPORT PRODUCED BY GROUND AND WATER.

1 in 40 TYPICAL CROSSFALL

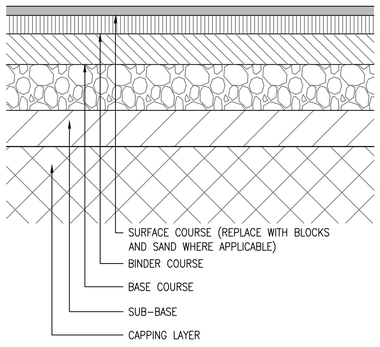


HRA CHIPPING SPEC:
14/20mm PRECOATED CHIPPINGS (PSV AS PER TABLE 3.1A OF IAN 156/12*) WITH A SPREAD RATE ACHIEVING A TEXTURE DEPTH IN ACCORDANCE WITH SERIES 900 TABLE 9/3* IN ACCORDANCE WITH BS EN 13108–4, PD 6691, BS 594987 COARSE

AGGREGATE TO BE CRUSHED ROCK OR SLAG, EXCLUDING LIMESTONE AND GRAVEL. COATED CHIPPINGS NOMINAL SIZE: 14/20.
AGGREGATE GRADING TO PD 6691 TABLE C.5 COLUMN NO.: 14/20 SIZE. FLAKINESS INDEX: F120.
MAXIMUM AAV: 12.
MINIMUM TARGET BINDER CONTENT BACT = 1.5%

BITMAC BUS ROUTE / SPINE ROAD CONSTRUCTION

| | | |
|---|---|---|
| SURFACE COURSE | – | 50mm THICK HRA 35/14 F SURF DES COURSE TO CL.943WITH 14/20mm PRE–COATED CHIPPINGS. SEE SPECIFICATION (LEFT) |
| BINDER COURSE | – | 60mm THICK 20mm DENSE ASPHALT CONCRETE BINDER 40/60 PEN TO CL. 906 |
| BASE COURSE | – | 150mm THICK 32mm DENSE ASPHALT CONCRETE BASE 40/60 PEN TO CL.906 |
| SUB–BASE | – | 150mm THICK MOT TYPE 1 (CLAUSE 803) |
| CAPPING LAYER | – | 350mm THICK 6F1/6F2 |

ACCESS ROAD CONSTRUCTION

| | | |
|---|---|---|
| SURFACE COURSE | – | 50mm THICK HRA 35/14 F SURF DES COURSE TO CL.943WITH 14/20mm PRE–COATED CHIPPINGS. SEE SPECIFICATION (LEFT) |
| BINDER COURSE | – | 60mm THICK 20mm DENSE ASPHALT CONCRETE BINDER 40/60 PEN TO CL. 906 |
| BASE COURSE | – | 150mm THICK 32mm DENSE ASPHALT CONCRETE BASE 40/60 PEN TO CL.906 |
| SUB–BASE | – | 150mm THICK MOT TYPE 1 (CLAUSE 803) |
| CAPPING LAYER | – | 350mm THICK 6F1/6F2 |

BLOCK PAVED BUS ROUTE / SPINE ROAD CONSTRUCTION

| | | |
|---|---|---|
| SURFACE COURSE | – | 80mm THICK CONCRETE BLOCK PAVING BEDDED ON 30mm SHARP SAND REF TO EXTERNAL WORKS LAYOUT FOR TYPE AND COLOR OF BLOCK |
| BINDER COURSE | – | NOT REQUIRED |
| BASE COURSE | – | 150mm THICK 32mm DENSE ASPHALT CONCRETE BASE 40/60 PEN TO CL.906 |
| SUB–BASE | – | 150mm THICK MOT TYPE 1 (CLAUSE 803) |
| CAPPING LAYER | – | 350mm THICK 6F1/6F2 |

BLOCK PAVED ACCESS ROAD CONSTRUCTION

| | | |
|---|---|---|
| SURFACE COURSE | – | 80mm THICK CONCRETE BLOCK PAVING BEDDED ON 30mm SHARP SAND REF TO EXTERNAL WORKS LAYOUT FOR TYPE AND COLOR OF BLOCK |
| BINDER COURSE | – | NOT REQUIRED |
| BASE COURSE | – | 100mm THICK 32mm DENSE ASPHALT CONCRETE BASE 40/60 PEN TO CL.906 |
| SUB–BASE | – | 150mm THICK MOT TYPE 1 (CLAUSE 803) |
| CAPPING LAYER | – | 350mm THICK 6F1/6F2 |

## 1) ROAD CONSTRUCTION DETAIL

DETAIL TO BE READ IN CONJUNCTION WITH WEST SUSSEX COUNTY COUNCIL STANDARD CONSTRUCTION DETAIL NO. S278/38/21 REV.F

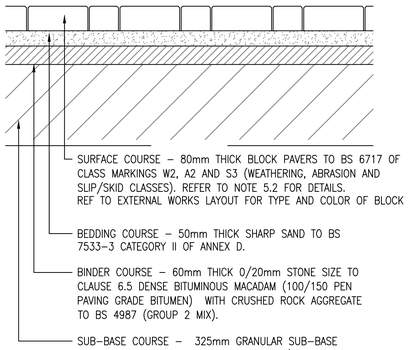


## 2) BLOCK PAVED ROAD

Construction in accordance with NHBC Chapter 10.2 Table 2a
Private road having frequent use by commercial vehicles

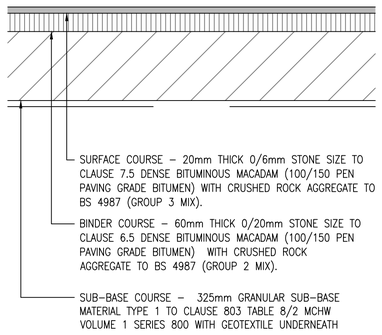


## 3) BITMAC FOOTWAY CONSTRUCTION

Construction in accordance with NHBC Chapter 10.2 Table 2a
Footway adjacent to private road having frequent use by commercial vehicles

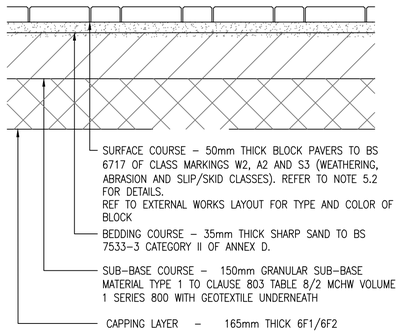


## 4) BLOCK PAVED PRIVATE DRIVE & PARKING SPACE

Construction in accordance with NHBC Chapter 10.2 Table 2d. Private drives and parking areas having use by cars and light vehicles

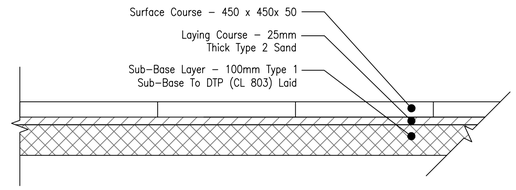


NOTES:
1. THE FORMATION BELOW ALL FOOTWAY AREAS SHALL BE PROOF ROLLED PRIOR TO PLACING THE SUB–BASE LAYER. ANY SOFT AREAS EXPOSED AT FORMATION, INCLUDING LOOSE TRENCH REINSTATEMENTS, SHALL BE REMOVED DOWN TO A FURTHER DEPTH OF 200mm AND SHALL BE FILLED WITH WELL COMPACTED TYPE 1 SUB–BASE.
2. WELL COMPACTED CLASS 6F2 SHW USED TO RAISE LEVELS UP TO FOOTWAY FORMATION LEVEL WHERE REQUIRED.
3. FRONT PAVING TO BE 450mm X 450mm LAID 900mm WIDE.

## 5) RESIDENTIAL FRONT FOOTPATH IN CONCRETE SETT PAVING

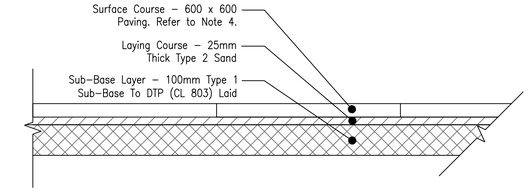


NOTES:
1. THE FORMATION BELOW ALL FOOTWAY AREAS SHALL BE PROOF ROLLED PRIOR TO PLACING THE SUB–BASE LAYER. ANY SOFT AREAS EXPOSED AT FORMATION, INCLUDING LOOSE TRENCH REINSTATEMENTS, SHALL BE REMOVED DOWN TO A FURTHER DEPTH OF 200mm AND SHALL BE FILLED WITH WELL COMPACTED TYPE 1 SUB–BASE.
2. WELL COMPACTED CLASS 6F2 SHW USED TO RAISE LEVELS UP TO FOOTWAY FORMATION LEVEL WHERE REQUIRED.
3. PERSONAL REAR ACCESS PATHS 600mm X 600mm TO BACK DOOR AT REAR / SIDE OF PROPERTY. PATIOS TO BE 600mm X 600mm TO WIDTH OF PATIO DOORS, MINIMUM 1800mm X 1200mm.
4. PAVING TO BE LAID 900mm WIDE WHERE REFUSE BINS ARE STORED IN REAR GARDEN. ACCESS PATHS TO MORE THAN ONE PROPERTY AND TO ALL PROPERTIES WITH INDIVIDUAL DRIVES TO BE LAID 900mm WIDE.

## 6) RESIDENTIAL FOOTPATH IN CONCRETE FLAG PAVING

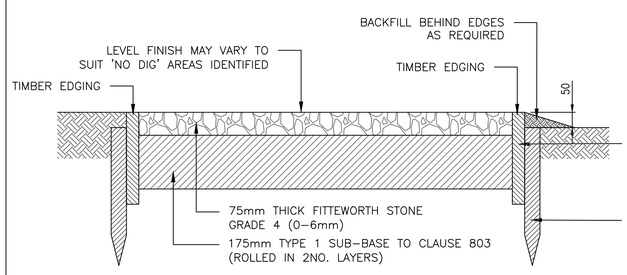


## 7) RURAL FOOTWAY TYPE A CONSTRUCTION

DETAIL TO BE READ IN CONJUNCTION WITH WEST SUSSEX COUNTY COUNCIL STANDARD CONSTRUCTION DETAIL NO. S278/38/06 REV.A

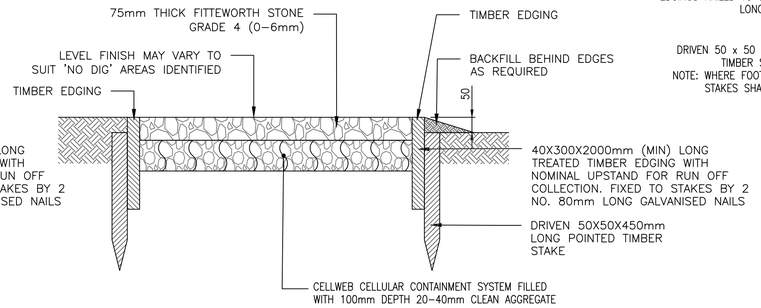


## 8) 'NO–DIG RURAL FOOTWAY TYPE A CONSTRUCTION

DETAIL TO BE READ IN CONJUNCTION WITH WEST SUSSEX COUNTY COUNCIL STANDARD CONSTRUCTION DETAIL NO. S278/38/06 REV.A

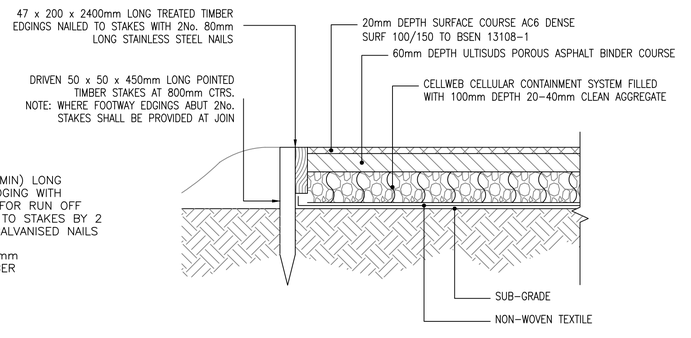


## 9) 'NO–DIG' FOOTPATH CONSTRUCTION DETAIL

DETAIL TO BE READ IN CONJUNCTION WITH WEST SUSSEX COUNTY COUNCIL STANDARD CONSTRUCTION DETAIL NO. S278/38/06 REV.A

The drawings, information and data recorded in this document ("the information") is the property of Paul Basham Associates.This document and the information are solely for the use of the authorized recipient and this document may not be used, copied or reproduced in whole or part for any purposes other than which it was supplied by Paul Basham Associates. Paul Basham Associates makes no representation, undertakes no duty and accepts no responsibilities to any third party who may use or rely upon this document or the information.

GENERAL NOTES

1. THIS DRAWING IS INTENDED TO BE VIEWED IN COMBINATION WITH ALL RELEVANT ARCHITECTS, ENGINEERS, SERVICES AND SPECIALIST DRAWINGS AND SPECIFICATION.
2. ANY VARIATIONS OR DISCREPANCIES BETWEEN THESE DRAWINGS IN TERMS OF DIMENSIONS OR DETAILS SHOULD BE DRAWN TO THE ATTENTION OF THE ARCHITECT AND/OR THE ENGINEER FOR CLARIFICATION.
3. PAUL BASHAM ASSOCIATES ACCEPTS NO RESPONSIBILITY FOR THE ACCURACY OF BACKGROUND INFORMATION PRODUCED BY THIRD PARTIES – THIS MUST BE TREATED AS INDICATIVE ONLY.
4. ALL DIMENSIONS AND LEVELS ARE IN METRES. DO NOT SCALE THIS DRAWING, PRINT, PLOT OR DISK.
5. THIS DRAWING SHOULD ONLY BE USED FOR CONSTRUCTION IF THE PROJECT PHASE IN THE TITLE FRAME BELOW IS SHOWN AS "CONSTRUCTION". PAUL BASHAM ASSOCIATES TAKE NO RESPONSIBILITY FOR CONSTRUCTION WORKS UNDERTAKEN TO DRAWINGS WHICH ARE NOT MARKED UNDER THIS PHASE.

CALA HOMES STANDARD NOTES

1. THE CONTRACTOR SHALL REVIEW ALL DOCUMENTS, DRAWINGS, REPORTS AND SURVEYS PROVIDED ON VIEWPOINT PRIOR TO COMMENCING WORK ON SITE. THIS SHALL INCLUDE THE CALA HOMES CONSTRUCTION SPECIFICATION. ANY DISCREPANCIES OR GAPS SHALL BE REPORTED TO THE TECHNICAL DEPARTMENT AT CALA HOMES IMMEDIATELY.
2. THE CONTRACTOR IS RESPONSIBLE FOR POSITIVELY IDENTIFYING ALL SERVICES ONSITE AND REPORTING THE POSITION AND DEPTH TO THE TECHNICAL DEPARTMENT AT CALA HOMES. WHEREVER POSSIBLE NON–INTRUSIVE METHODS, SUCH AS GPR, SHOULD BE USED.
3. THE CONTRACTOR IS TO STRIP THE SITE TOPSOIL IN SECTIONS, USING TRACKED EQUIPMENT AND IN DRY CONDITIONS. TOPSOIL AND SUBSOIL ARE TO BE STORED IN SEEDED STOCKPILES TO PROTECT THEM FROM EROSION. PRIOR TO PLACING TOPSOIL, THE SUBSOIL SHOULD BE RIPPED USING A SINGLE TYNE RIPPER TO A SUITABLE DEPTH TO ENCOURAGE POSITIVE DRAINAGE OF THE SOIL.
4. IN–SITU CBR TESTS SHALL BE UNDERTAKEN FOR EACH SECTION OF HIGHWAY AT INTERVALS OF 25M OR LESS. RESULTS TO BE SUBMITTED TO THE TECHNICAL DEPARTMENT AT CALA HOMES FOR APPROVAL PRIOR TO CARRIAGEWAY CONSTRUCTION.
5. ALL DRAINAGE WORKS TO BE CARRIED OUT IN ACCORDANCE WITH THE CURRENT EDITIONS OF THE DESIGN AND CONSTRUCTION GUIDANCE (DSG), AND THE BUILDING REGULATIONS "APPROVED DOCUMENT H". ANY DISCREPANCIES SHOULD BE REPORTED TO CALA FOR CLARIFICATION BEFORE PROCEEDING WITH THE WORKS.
6. ALL MANHOLE CHAMBER COVERS TO BE INSTALLED PARALLEL TO FINAL KERBS, EDGINGS, PAVING JOINTS OR BUILDING LINES AS APPROPRIATE. THE MANHOLE COVER SHALL BE PLACED ENTIRELY WITHIN ONE SURFACE FINISH.
7. THE CONTRACTOR IS TO SEEK APPROVAL FROM THE TECHNICAL DEPARTMENT AT CALA HOMES PRIOR TO ORDERING ANY PERFECT MANHOLES.
8. ON COMPLETION OF EACH BUILD AREA THE CONTRACTOR SHALL JET CLEAN AND CCTV ALL DRAINAGE AND PROVIDE A COPY OF THE VIDEO FOOTAGE AND PDF REPORT TO CALA. THE REPORT SHALL INCLUDE AN EXECUTIVE SUMMARY OF THE FINDINGS AND A SCHEMATIC OF THE DRAINAGE LAYOUT.
9. PRIOR TO FORMING EACH DWELLING ACCESS, THE CONTRACTOR SHALL CHECK THAT THE AS–BUILT LEVELS COMPLY WITH THE CURRENT VERSION OF THE NHBC TECHNICAL STANDARDS AND THE BUILDING REGULATIONS PART M. IF CLARIFICATION OR DESIGN CHANGE IS REQUIRED, THE CONTRACTOR SHALL AWAIT FURTHER INSTRUCTION FROM CALA BEFORE PROCEEDING.
10. THE CONTRACTOR IS TO PROVIDE AS–BUILT RECORDS IN PDF AND DWG FORMAT FOR THE FULL EXTENT OF THE WORKS. THIS IS TO INCLUDE (BUT NOT LIMITED TO) ALL SERVICES, HIGHWAYS, DRAINAGE, RETAINING STRUCTURES, AND ALL EXTERNAL AREAS.

| Rev | Description | Date | By | Chkd |
|---|---|---|---|---|
| C | CONSTRUCTION THICKNESS REVISED | 06.04.23 | LC | RW |
| B | UPDATED TO MEET CBR REQUIREMENTS | 27.09.22 | LC | CL |
| A | DETAILED DESIGN ISSUE | 11.08.22 | LC | RW |

paulbasham associates
Paul Basham Associates Ltd
The Bothy, Cams Hall Estate, Fareham, PO16 8UT
01329 711 000
info@paulbashamassociates.com www.paulbashamassociates.com

Client: CALA

Project Name: LAND NORTH OF WATER LANE ANGMERING

Title: HIGHWAY CONSTRUCTION DETAILS SHEET 1 OF 3

Project Phase: DETAILED DESIGN

| Checked By | Checked Date | Drawn By | Drawn Date |
|---|---|---|---|
| CL | 27.09.22 | SRV | 22.03.22 |

| Client Drawing No. | Scale | |
|---|---|---|
| – | NTS | (AT A1 SIZE) |

PBA Drawing No.: 189.5005.901
Revision: C

ARUN DISTRICT COUNCIL A/26/24/OOC