[redacted]

From: Stuart Corbey
Sent: 21 March 2019 08:43
To: Planning.Responses
Subject: A/168/18/RES Merry England Nursery, Dappers Lane

PLEASE CAN WE UPLOAD THE DRAINAGE REPORT AS ATTACHED.

THANKS.

From: Alex Bateman[redacted]
Sent: 27 February 2019 10:08
To: Stuart Corbey
Cc: Laura Gibbons; Neil Drinkwater
Subject: Merry England Nursery, Dappers Lane

Stuart,

I trust you are well.

Attached is the Drainage Report provided by Ambiental.

I trust that this addresses the concerns raised by Laura in her recent consultation response.

I am in discussions with our landscape team and will aim to have that information to you soon also.

SHW

Alex Bateman *BA (Hons) MSc MRTPI*
Director of Planning

for and on behalf of Stiles Harold Williams Partnership LLP
e: abateman@shw.co.uk [redacted]

Brighton Office
One Jubilee Street, Brighton, East Sussex BN1 1GE
[redacted]

Stiles Harold Williams Partnership LLP trades as SHW and is a firm of Chartered Surveyors and Town Planners registered in England and Wales Registered No: OC375748 - Registered Office: Venture House, 27/29 Glasshouse Street, W1B 5DF. VAT No: GB 692 7716 90 - Regulated by RICS.
Cyber-Crime Disclaimer: Please be aware of cyber-crime. You rely on emailed details at your own risk. If you have received any bank details by email you must telephone to check them. Stiles Harold Williams Partnership LLP will accept no responsibility if you transfer money to a wrong account.

Our bank account details will NOT change during the course of a transaction.
Disclaimer: View disclaimer on our website

AMBIENTAL

ENVIRONMENTAL ASSESSMENT

Surface Water Drainage Strategy (SWDS) 4383

Merry England Nursery

Dappers Lane

Angmering

BN16 4EN

ARUN DISTRICT COUNCIL A/168/18/RES

Document Issue Record

Project: Surface Water Drainage Strategy (SWDS)

Prepared for: Peter Nicholas Homes Ltd

Reference: 4383 SWDS

Site Location: Merry England Nursery, Dappers Lane, Angmering, BN16 4EN

Proposed Development: Demolition of existing buildings and the construction of a multi residential housing development.

Consultant		Date	Signature
Author	Stavros Drakopoulos	26/02/2019	[redacted]
Document Check	Thea Powell	26/02/2019	
Authorisation	Mark Naumann	26/02/2019	

Please Note:

This report has been prepared for the exclusive use of the commissioning party and may not be reproduced without prior written permission from AMBIENTAL Environmental Assessment. All work has been carried out within the terms of the brief using all reasonable skill, care and diligence. No liability is accepted by AMBIENTAL for the accuracy of data or opinions provided by others in the preparation of this report, or for any use of this report other than for the purpose for which it was produced.

Contact Us:

Ambiental Environmental Assessment
Science Park Square
Brighton, BN1 9SB
[redacted]

ARUN DISTRICT COUNCIL A/168/18/RES

Contents

1. Introduction 4

2. Flood Risk 6

3. SUDS Assessment 10

4. Surface Water Drainage Strategy 12

5. Design Exceedance 14

6. Water Quality 14

7. Conclusion 17

Appendix 1 – Supporting Information

Appendix 2 – Preliminary Surface Water Drainage Strategy Layout

Appendix 3 – Calculations

ARUN DISTRICT COUNCIL A/168/18/RES

1. Introduction

1.1 Ambiental Environmental Assessment has been appointed by Peter Nicholas Homes Limited to undertake a Surface Water Drainage Strategy for the proposed development at Merry England Nursery, Dappers Lane, Angmering, BN16 4EN.

1.2 The existing site compromises plant nursery buildings and hardstanding. The proposed development is for the demolition of the existing structures and the construction of 18 new dwellings and associated works.

1.3 The redline application boundary area is approximately 1180m^2 (1.18ha). The existing impermeable area associated with the buildings and hardstanding totals approximately 1330m^2 (0.133ha). The total hardstanding area post-development would increase to approximately 4690m^2 (0.469ha) according to the proposed plans. See in Appendix 1 – Site Information.

Figure 1: Site Location

1.4 Elevations on site vary between approximately 19mAOD at the lowest point at the south-western (SW) boundary rising to 22mAOD to the north-eastern (NE) site corner. Analysis of topographic levels indicate that levels are relatively flat, centrally across the site from east to west, at approximately 20.5mAOD. See topographic survey conducted by *Trueplan Ltd (job no. 25532/4546)* in Appendix 1 – Site Information.

1.5 The purpose of this assessment is to demonstrate that the development proposal outlined above can be satisfactorily accommodated without worsening flood risk for the area and without placing the development itself at risk of flooding, as per National guidance provided within the National Planning Policy Framework (NPPF) 2018 the National Planning Practice Guidance (NPPG), DEFRA's National Standards for Sustainable Drainage and Local guidance provided within West Sussex County Council SuDS Design Guide and Arun District Council Drainage Checklist.

ARUN DISTRICT COUNCIL A/168/18/RES

Existing Drainage Infrastructure

1.6 The topographic survey conducted by *Trueplan Ltd (job no. 25532/4546)* indicates the presence of a road gully however no further information is provided.

1.7 The topography of the existing ditch located on the site's western boundary and running in a southerly direction was investigated by *SeSurveying (job no. 016 02 19 – 011).* See topographic plan in Appendix 1. The survey reveals that the lowest in-channel level of the ditch next to the site is at approximately 18.45mAOD.

Geology and Infiltration Potential

1.8 No specific site investigation has been provided to Ambiental at the time of writing. The British Geological Survey (BGS) Geology of Britain Viewer indicates that the bedrock underlying the site is London Clay Formation - clay, silt and sand. The superficial soil deposits in the wider area have been recorded on the BGS viewer as Head - clay, silt, sand and gravel.

1.9 Soil information from the Soilscapes website indicates that the superficial deposits at the site are clayey with impeded drainage.

1.10 A nearby borehole (Ref: T TQ00SE4 — NURSERY ANGERING, see excerpt in Appendix 1) identified the topsoil deposits as *Loam* to a depth of 1.5m below ground level (BGL) followed by *Gravel+flints* between 1.5m – 5.8m BGL. Water was encountered first at 11mBGL. Groundwater monitoring is recommended to confirm the level at the site.

1.11 The *DEFRA Groundwater Source Protection Zone Map* indicates that the site is not located in groundwater source protection zone.

1.12 The *DEFRA Aquifer Designation Map* indicates that the site is located in an unproductive aquifer.

1.13 At the time of writing, the client has not provided site-specific infiltration data and given the predominant silty clay texture of the superficial geology at the site, infiltration SuDS solutions have not been considered as a principal method of surface water discharges.

1.14 Infiltration testing to BRE365 should be conducted prior to detailed design to confirm the rates and the drainage strategy proposed herein amended to suit findings.

1.15 Partial infiltration should be considered where possible (regardless of infiltration testing results) to promote groundwater recharge and vegetation growth.

ARUN DISTRICT COUNCIL A/168/18/RES

2. Flood Risk

EA Flood Map for Planning

2.1 With reference to the NPPF 2018 and the Environment Agency (EA) standing advice on development and flood risk, as well as the low detail, national-scale flood mapping created on behalf of the EA, the application site is shown located within Flood Zone 1 (Figure 2). Based on the EA flood map for planning the proposed development has an annual probability of fluvial or tidal flooding of less than 0.1% (1 in 1000) in any year.

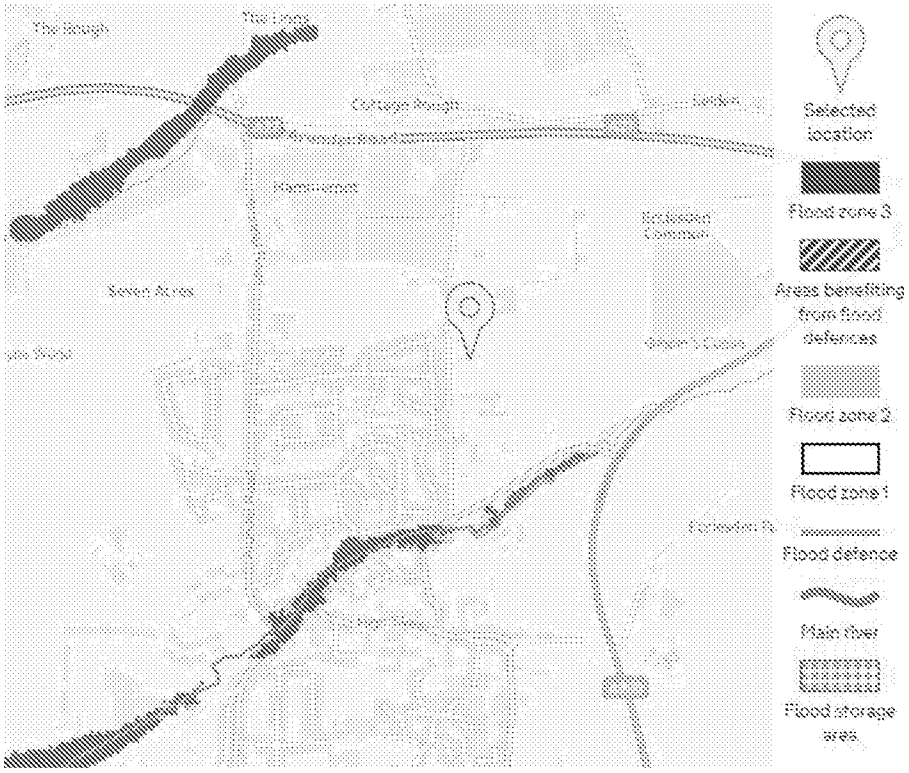

Figure 2: Flood risk map for planning (Source: Environmental Agency, EA)

Vulnerability Classification

2.2 The proposed development usage is for residential purposes and as such, under the NPPF 2018, is classified as a 'More Vulnerable'. According to Table 1 below extracted from the NPPF 2018 indicates the development is appropriate for this flood zone.

Flood Risk Vulnerability Classification		Essential Infrastructure	Water Compatible	Highly Vulnerable	More Vulnerable	Less Vulnerable
Flood Zone	Zone 1	✓	✓	✓	✓	✓
	Zone 2	✓	✓	Exception Test Required	✓	✓
	Zone 3a	Exception Test Required	✓	×	Exception Test Required	✓
	Zone 3b *Functional Floodplain*	Exception Test Required	✓	×	×	×

Table 1: Flood risk vulnerability and flood zone 'Compatibility' table as specified by NPPF 2018. Shaded cells denote the proposed re-development. Please note: ✓ means development is appropriate; × means the development should not be permitted

ARUN DISTRICT COUNCIL A/168/18/RES

2.3 As such, under the NPPF 2018 guidance, this development is not required to implement the Exception Test, and the development is considered appropriate.

Other Sources of Flooding

Surface Water (Pluvial)

2.4 The EA Risk of Surface Water map shows the site to be located in an area with a "Very Low" and "Low" risk of surface water flooding. Areas at "Low" risk have a chance of flooding of between 1 in 1000 (0.1%) and 1 in 100 (1%). *Figure 3 – Flood Risk Flood Risk from Surface Water* below.

2.5 No records have been provided by the EA or the Arun District Council SFRA (2009) to suggest that the site has previously flooded from this source.

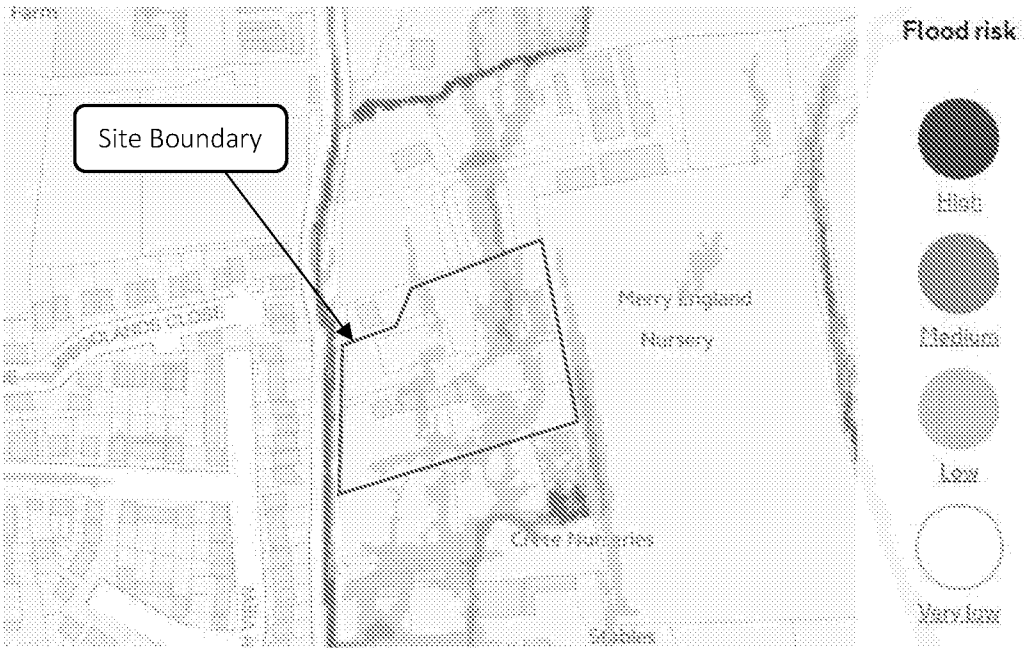

Figure 3 – Flood Risk from Surface Water (Source: Environmental Agency, EA)

Figure 4 - EA Surface Water Depth, Low Chance of Occurring (Source: EA)

ARUN DISTRICT COUNCIL A/168/18/RES

2.6 The EA's Surface Water Depth – Low Chance of Occurring Map shows areas of the site to experience flood depths up to 300mm during such an event (Figure 4). Analysis of the flow velocities indicates that the areas identified at a 'Low' risk of flooding are predominantly flow paths and discharge into the ditch to the west.

2.7 As such, the risk from surface water flooding can be considered to be low.

Groundwater

2.8 The DEFRA online mapping service has confirmed that the site is not located within a groundwater protection zone nor within a productive aquifer.

2.9 No records have been provided by the EA or in the Arun District Council SFRA, to suggest that the site has previously flooded from this source.

2.10 As such, risk of future groundwater flooding is deemed to be low.

Sewer

2.11 No records have been provided by the EA or in the Arun District Council SFRA, to suggest that the site has previously flooded from this source.

2.12 As such, the risk from this source is considered to be low.

Climate Change on Site

2.13 Climate change is likely to increase the flow in rivers and raise sea levels and storm intensity. Under the NPPF, climate change is likely to increase the flow in rivers by 20%. The NPPF also specifies a 10% increase in peak rainfall intensity from 2025 (and 20% increase from 2055 and a 40% increase from 2085 to 2115) (Source: Recommended national precautionary *sensitivity ranges for peak rainfall intensities, peak river flows, offshore wind speeds and wave heights, Technical Guidance to the NPPF)*.

2.14 As such the proposed development may be at more risk of flooding in the future.

Flood Risk Management Measures

2.15 The proposed development is shown to be located within Flood Zone 1 according to the low-detailed EA Flood Map for Planning, having a less than 1 in 1,000 annual probability of river or sea flooding in any year (<0.1%) as shown in Figure 2.

2.16 The predominant flood risk source on site is from surface water. To provide betterment to the site during its lifetime, it is recommended that the proposed development should incorporate the following mitigation measures:

- Bringing down electrical services from ceilings toward the floor, at ground floor level;
- Raise internal threshold to ground floor above the external ground level by 300mm, if possible;
- Anti-syphon fitted to all toilets;
- Non-return valves to be fitted to all drain and sewer outlets.

2.17 Given that the site and all the surrounding roads are located in Flood Zone 1, there is no requirement under the NPPF for an evacuation route.

Residual Risks

2.18 Residual risks are those remaining after applying the sequential approach to the location of development and taking mitigating actions. Examples of residual flood risk include:

- the failure of flood management infrastructure such as a breach of a raised flood defence, blockage of a surface water conveyance system, overtopping of an upstream storage area, or failure of a pumped drainage system;
- failure of a reservoir, or;
- a severe flood event that exceeds a flood management design standard, such as a flood that overtops a raised flood defence, or an intense rainfall event which the drainage system cannot cope with.

2.19 The site has been identified by EA Flood Map for Planning to be located outside all extreme modelled flood extents and as such there is no residual risk of defence failure or overtopping to the site.

2.20 Analysis of the site's risk of flooding from reservoir failure based on the EA's Risk of Flooding from Reservoirs map shows the site to be located entirely outside the maximum extent of flooding.

2.21 In the event of drainage system failure under extreme rainfall events or blockage, overland flow may occur within the site. In the event of the development's drainage system failure, the runoff flow will be dictated by topography on site. Design of external ground levels should be completed at detailed design stage to finalise these overland routes, but some indicative flow paths have been indicated on the outline strategy drawings. External levels should be designed to direct overland flow away from buildings and threshold as depicted on the proposed surface water drainage layout (Ambiental drawing no. 4383-01).

2.22 It is advised that the finished floor level of the proposed building should be 300mm above external ground levels to ensure water runoff would not impact on the building in the event of drainage system failure or extreme rainfall events.

ARUN DISTRICT COUNCIL A/168/18/RES

3. SUDS Assessment

3.1 In accordance with the SuDS management train approach, the use of various SuDS measures to reduce and control surface water flows have been considered in detail for the development.

3.2 Paragraph 80 of the Planning Practice Guidance of the National Planning Policy Framework (NPPF) states that: generally, the aim should be to discharge surface run off as high up the following hierarchy of drainage options as reasonably practicable, see Table 2.

3.3 The management of surface water has been considered in respect to the SuDS hierarchy (below) (as detailed in Building Regulations Part H and within the the *CIRIA 753 'The SUDS Manual', Section 3.2.3)*:

SuDS Drainage Hierarchy			
		Suitability	**Comment**
1.	**Infiltration**	x	At the time of writing no infiltration testing was conducted therefore not considered at this stage. Infiltration testing to BRE365 should be conducted prior to detailed design and drainage strategy amended to suit.
2.	**Discharge to Surface Water**	✓	Ditch located on the site's western boundary.
3.	**Discharge to Surface Water Sewer, Highway Drain or another Drainage System**	x	Discharges to watercourses take precedence over discharges to the surface water sewer.
4.	**Discharge to Combined Sewer**	x	Discharges to watercourses take precedence over discharges to the combined water sewer.

Table 2: SuDS Hierarchy

3.4 To achieve the reduction in site run off rates, the use of various SuDS have been considered for the development as follows:

Suitability of SuDS Components		
SuDS Component	**Description**	**Suitability**
Permeable Pavement	Pervious surfaces can be used in combination with aggregate sub-base and/or geocellular/modular storage to attenuate and/or infiltrate runoff from surrounding surfaces and roofs. Liners can be used where ground conditions are not suitable for infiltration.	✓
Green Roofs	Green Roofs provide areas of visual benefit, ecological value, enhanced building performance and the reduction of surface water runoff. They are generally more costly to install and maintain than conventional roofs but can provide many long-term benefits and reduce the on-site storage volumes.	x
Rainwater Harvesting	Rainwater Harvesting is the collection of rainwater runoff for use. It can be collected form roofs or other impermeable area, stored, treated (where required) and then used as a supply of water for domestic, commercial and industrial properties.	✓
Swales	Swales are designed to convey, treat and attenuate surface water runoff and provide aesthetic and biodiversity benefits. They can replace conventional pipework as a means of conveying runoff, however space constraints of some sites can make it difficult incorporating them into the design.	x

ARUN DISTRICT COUNCIL A/168/18/RES

Rills and Channels	Rills and Channels keep runoff on the surface and convey runoff along the surface to downstream SuDS components. They can be incorporated into the design to provide a visually appealing method of conveyance, they also provide effectiveness in pre-treatment removal of silts.	x
Bioretention Systems	Bioretention systems can reduce runoff rates and volumes and treat pollution through the use of engineer soils and vegetation. They are particularly effective in delivering interception, but can also be an attractive landscape feature whilst providing habitat and biodiversity.	x
Retention Ponds and Wetlands	Ponds and Wetlands are features with a permanent pool of water that provide both attenuation and treatment of surface water runoff. They enhance treatment processes and have great amenity and biodiversity benefits. Often a flow control system at the outfall controls the rates of discharge for a range of water levels during storm events.	x
Detention Basins	Detention Basins are landscaped depressions that are usually dry except during and immediately following storm events, and can be used as a recreational or other amenity facility. They generally appropriate to manage high volumes of surface water from larger sites such as a neighbourhoods.	x
Geocellular Systems	Attenuation storage tanks are used to create a below-ground void space for the temporary storage of surface water before infiltration, controlled release or use. The inherent flexibility in size and shape means they can be tailored to suit the specific characteristics and requirements of any site.	✓
Proprietary Treatment Systems	Proprietary treatment systems are manufactured products that remove specific pollutants from surface water runoff. They are especially useful where site constraints preclude the use of other methods and can be useful in reducing the maintenance requirements of downstream SuDS	✓
Filter Drains and Filter Strips	Filter drains are shallow trenches filled with stone, gravel that cerate temporary subsurface storage for the attenuation, conveyance and filtration of surface water runoff. Filter strips are uniformly graded and gently sloping strips of grass or dense vegetation, designed to treat runoff from adjacent impermeable areas by promoting sedimentation, filtration and infiltration.	x

Table 3: Suitability of SuDS Components

3.5 Several SuDS components are deemed appropriate to be used in the following SuDS management train. It is suggested the use of ***Type B Permeable Pavement and*** **Geocellular Structures** as the SuDS components to intercept, treat and attenuate the surface water runoff. In accordance with the recommendations of *SuDS Design Guidance for West Sussex* water re-use can be achieved with the provision of **Rainwater Butts**, a type of Rainwater Harvesting Systems (RWH).

3.6 SuDS components should be designed to accommodate and dispose of runoff from storms up to and including the 1:100 year +40% climate change event without flooding.

Rainwater Harvesting

3.7 Rainwater harvesting (RWH) Systems should be considered for rainwater re-use. Rainwater harvesting can take various forms including simple water butts to utilise runoff for watering and irrigation, to more complex pumped RWH systems to be used in grey water uses. It is strongly recommended that rainwater harvesting is considered, however, the viability and suitability of an RWH system should be reviewed by a specialist to determine the suitability in context to the rest of the site proposals. For the purposes of attenuation and storage calculations, it is considered the harvesting devices are full at the time of the design rainfall event.

3.8 It is proposed that the *Water Butt RWH System* is considered, which is the most common type. In general terms, the runoff management layout of this type of *RWH* is to store water at ground level and used in gardens.

ARUN DISTRICT COUNCIL A/168/18/RES

- The water butt is connected to a downpipe draining the roof;
- The water is fed by gravity to the domestic applications;
- If the storage tank is full, the exceeding volume of water is released to downstream attenuation storage devices or to the existing drain network.

3.9 It is recommended to provide Permeable Pavement for the site's driveway. The Permeable Paving should be Type B (Partial infiltration), the paving would be formed by the following layers:

- Granite setts with permeable joints
- Laying Course Material
- Geotextile filter
- Sub-Base: 6-20mm Clean Crushed Stone
- Geotextile

3.10 The permeable paving in the road should be unlined to promote groundwater recharge to infiltrate frequent rainfall events. Infiltration rates for the paving should not be accounted for in volume/discharge calculations without site-specific BRE365 infiltration testing results.

3.11 The Geocellular Systems are generally built by placing together (e.g. stacking) cuboid plastic structures with very high void ratios (90-95%). The formed volume is then surrounded by a geotextile or geomembrane and backfilled with the excavated soil to form the attenuation tank.

Proprietary Treatment Systems

3.12 Sediment Traps should be installed between downpipes and SuDS devices to reduce the incidence of blockage or silting up. External hard landscaping should be laid such that the arising runoff from the hardstanding areas can be collected and managed by the proposed SuDS train.

3.13 Bespoke oil and sediment filters should be provided in manholes intercepting flows from non-SuDS driveways (i.e. totally impermeable built with typical asphalt). Guidance about proper use, installation and maintenance of any proprietary system must be provided by the supplier and incorporated into the site proposals at detailed design stage.

4. Surface Water Drainage Strategy

4.1 In order to mitigate flood risk posed by the proposed development, adequate control measures are required to be considered. This will ensure that surface water runoff is dealt with at source and the flood risk on/off site is not increased over the lifetime of the development.

4.2 The site is developed, thus it is considered brownfield. Following development, the total impermeable site area would increase and, as a result, a larger amount of runoff will be generated by the proposed development.

4.3 In comparison to the original topographic survey, the provided plans from the architect show the impermeable surface will increase by approximately 3360m² following development, to a total impermeable site area of 4690m². The runoff generated will need to be managed in accordance with the National Planning Policy Framework (NPPF 2018) policy which requires the use of Sustainable Drainage Systems (SuDS). The design guidelines for the SuDS should follow the recommendations set out in *SuDS Design Guide* of the LLFA – West Sussex County Council.

4.4 Within the proposed SuDS scheme, complex flow control devices coupled with geocellular tanks and permeable paving are used to attenuate the runoff to the site's greenfield runoff rates.

ARUN DISTRICT COUNCIL A/168/18/RES

4.5 Part of the proposed driveway is located across the relatively flat site topography, at 20.5mAOD. As such, it is proposed that the permeable paving within this section of the driveway to have a flat formation level and provide attenuation storage.

4.6 The geocellular tanks are located strategically beneath the permeable pavement to accommodate part of the storage volume requirement for the site. The recommended positioning and accompanying details are indicated on the Surface Water Drainage Network Layout and Drainage Details (See Drawing nos. 4383-01 and 4383-02 in Appendix 2).

4.7 Outflows are limited to the greenfield rates by a complex flow control mechanism consisting of a Hydrobrak and an orifice plate positioned above the Hydrobrake at specific distance to achieve the discharge profile required.

4.8 The design lifetime of a residential site is 100 years and an allowance for climate change should be considered in accordance with published guidance within the NPPF 2018. The climate change criteria are reproduced below, and it is likely that the 'upper end' allowance for 2070 to 2115 is deemed suitable for the proposed development. To provide a worst-case scenario, the 'upper end' 40% climate change allowance will be used (Table 4).

PEAK RAINFALL INTENSITY ALLOWANCE IN SMALL AND URBAN CATCHMENTS			
Applies across all of England	**Total potential change anticipated for the '2020s' (2015 to 2039)**	**Total potential change anticipated for the '2050s' (2040 to 2069)**	**Total potential change anticipated for the '2080s' (2070 to 2115)**
Upper End	10%	20%	40%
Central	5%	10%	20%

Table 4: Peak rainfall intensity allowance in small and urban catchments

4.9 The SuDS system proposed for the new development adheres to the Council's requirement of demonstrating surface water control and attenuation storage on site with the intention of mitigating the impact on the existing flooding regime.

Runoff rates

4.10 According to the plans provided by the client, the proposed impermeable site area is associated with a Greenfield Runoff Rate (Q_{BAR}) of 1.7 l/s and 5.4 l/s during a 1 in 100 year flood event. Other results properly factored for each return period and area of the site are shown in Appendix 3, Calculations and also in Table 5 below.

4.11 Based on the council's SuDS guidelines, it is proposed to limit the design rainfall events of 1 in 1 year, 1 in 30 year, 1 in 100 year with an allowance for climate change as close as possible to their associated greenfield rates.

SURFACE WATER DISCHARGE RATES SUMMARY					
	Area (ha)	**Discharge Rates (l/s)**			
		1 year	**2 year/Q_{BAR}**	**30 year**	**100 year**
Greenfield Rates	0.469	1.7	1.4	3.8	5.4
Brownfield Rates	0.133	-	55	98.9	99.2
Proposed Site (+40% CC)	**0.469**	**-**	**2***	**3.8**	**5.4**

Table 5: Surface water discharge rates summary
**The minimum outflow rate to prevent blockages*

On Site Drainage and Storage Systems

4.12 Attenuation storage is needed to temporarily store water during periods when the runoff rates from the development site exceed the allowable discharge rates from the site.

ARUN DISTRICT COUNCIL A/168/18/RES

4.13 Rainfall depths for the 1 in 100 years return period plus 40% of CC were produced using Micro Drainage software to estimate the largest volume and critical storm, for typical storm durations.

4.14 Calculations indicate that approximately 300 m^3 of storage will be required to attenuate runoff from the 1:100 year +40% climate change at the flow rate of 5.4 l/s.

4.15 The attenuation storage requirement is provided within geocellular tanks located below the car parking areas located closest to the site's northern and southern boundaries. The geocellular crates would provide approximately 154m^3 of the storage requirement and the remaining 146m^3 would be accommodated within the sub-base of the proposed permeable paving and drainage network. **See Appendix 2 –Surface Water Drainage Strategy Layout.**

4.16 Guidance about proper use, installation and maintenance of any proprietary system must be provided by the supplier and incorporated into the site proposals at detailed design stage.

5. Design Exceedance

5.1 In the event of drainage system failure under extreme rainfall events or blockage, overland flow may occur within the site. In the event of the development's drainage system failure, the runoff flow will be dictated by topography on site. Design of external ground levels should be completed at detailed design stage to finalise these overland routes, but some indicative flow paths have been indicated on the outline strategy drawings. External levels should be designed to direct overland flow away from buildings and threshold as depicted on the proposed surface water drainage layout (Ambiental drawing no. 4383-01).

5.2 It is advised that the finished floor level of the proposed building should be 300mm above in the event of drainage system failure, extreme rainfall events or blockage, as flooding would occur within the site. In the event it should be ensured water runoff should not impact on the building.

6. Water Quality

6.1 Adequate treatment must be delivered to the water runoff to remove pollutants through SuDS devices, which are able to provide pollution mitigation. Pollution Hazards and the SuDS Mitigation have been indexed in the CIRIA 753 'The SUDS Manual'.

6.2 The Pollution Hazard Indices are summarized in Table 6 – Summary of Pollution Hazard Indices for different Land Use below (reference: Table 26.3.CIRIA SuDS Manual 2015).

POLLUTION HAZARD INDICES FOR DIFFERENT LAND USE CLASSIFICATIONS				
LAND USE	**Pollution Hazard Level**	**Total suspended Solids (TSS)**	**Metals**	**Hydrocarbons**
Residential Roofs	Very Low	0.2	0.2	0.05
Individual property driveways	Low	0.5	0.4	0.4

Table 6: Summary of Pollution hazard Indices for different Land Use.

6.3 The Mitigation Indices of the proposed SuDS techniques are summarized in the Table 7 - Indicative SuDS Mitigation Indices below. It can be seen the water treatment provided by the Permeable Pavement (the SuDS mechanisms proposed), should be enough to remove the pollutants.

INDICATIVE SuDS MITIGATION INDICES FOR DISCHARGES TO SURFACE WATER			
SuDS Component	**Total suspended Solids (TSS)**	**Metals**	**Hydrocarbons**
Permeable Pavement	0.7	0.6	0.7
Geocellular Tank	-	-	-
Proprietary Treatment Systems	Details should be provided at the detailed design phase to account for the final SuDS strategy layout and wider construction design details.		

Table 7: Indicative SuDS Mitigation Indices

ARUN DISTRICT COUNCIL A/168/18/RES

6.4 Runoff from roof areas is considered to generally be uncontaminated. However, to prevent any potential sediment from impacting on the storage structure, S*ediments Traps* should be provided on the outlet to the storage structure to prevent sedimentation, with rodding access provided either side for cleaning and maintenance.

6.5 The runoff generated on driveways that are not built as Permeable Pavement SuDS would not benefit from treatment, therefore it is proposed to provide bespoke filtration systems within the drainage network intercepting runoff from these driveways.

Adoption and Maintenance

6.6 All onsite SuDS and drainage systems will be privately maintained. A long-term maintenance regime should be agreed with the site owners before adoption. In addition to a long-term maintenance regime, it is recommended that all drainage elements implemented on site should be inspected following the first rainfall event post construction and monthly for the first quarter following construction.

GENERAL REQUIREMENTS		RESPONSIBILITY	
Generally	**Frequency**	**Maintenance Company**	**Home Owner**
Pipes and Litter: collect all litter or other debris and remove from site at each visit	Monthly	Yes, where draining more than one property or located in communal areas	Yes, where drains serve the one property only or within property boundary
INLETS, OUTLETS, CONTROLS, GULLIES, CHANNEL DRAINS, GEOCELLULAR ATTENUATION TANKS AND INSPECTION CHAMBERS			
Regular Maintenance	**Frequency**		
Inspect surface structures removing obstructions, sediment, oil/grease and floating debris and silt as necessary. Check there is no physical damage. Strim vegetation 1m min. surround to structures and keep hard aprons free from silt and debris.	Monthly	Yes, where draining more than one property or located in communal areas	Yes, where drains serve the one property only or within property boundary
Flow Control Devices (Hydrobrake): Inspect and remove blockages, hose down as required, check flow.	Six monthly	Yes	
Inspection chambers, Gullies, Channel Drains: Remove cover and inspect ensuring water is flowing freely and that the exit route for water is unobstructed. Remove debris and silt. Undertake inspection after leaf fall in autumn and major storm events	Annually	Yes, where draining more than one property or located in communal areas	Yes, where drains serve the one property only or within property boundary
Attenuation Tank (Geocellular): Inspect and remove blockages, Jet and camera as required, check flow. CCTV inspection at every inspection point is recommended: — after every major storm — at regular intervals. Silt traps prior to inlet pipework should be routinely inspected and cleaned out to minimise debris reaching the tank	Annually	Yes, maintenance to be undertaken by maintenance company.	
Occasional Maintenance			
Cleaning of the system if necessary. CCTV Survey and Jetting	As necessary	Yes, where draining more than one	Yes, where drains serve the one property only or

ARUN DISTRICT COUNCIL A/168/18/RES

		property or located in communal areas	within property boundary
Remedial work			
Inspect and remove baskets or similar silt-traps, clean and replace. Repair physical damage if necessary.	As necessary	Yes, where draining more than one property or located in communal areas	Yes, where drains serve the one property only or within property boundary
PERMEABLE AND POROUS SURFACES			
Regular Maintenance			
Cleaning Brush regularly and remove sweepings from all hard surfaces	Monthly	Yes, shared access road	Yes, private driveways
Occasional Maintenance			
Permeable Pavements. Brush and vacuum surface once a year to prevent silt blockage and enhance design life.	Annually	Yes, shared access road	Yes, private driveways
Remedial work			
Monitor effectiveness of permeable pavement and when water does not infiltrate immediately advise Client of possible need for reinstatement of top layers or specialist cleaning. Recent experience suggests jet washing and suction cleaning will substantially reinstate pavement to 90% efficiency.	As required	Yes, shared access road	Yes, private driveways
OVERLAND FLOW AND DESIGNED FLOODABLE AREAS			
Regular Maintenance			
Ensure flood flow routes or areas that are design to temporarily store flood water are not obstructed. Remove obstructions from site	Monthly	Maintenance Company in communal areas, home owners in private areas.	

Table 8: Proposed Schedule of Maintenance for Below Ground Drainage.

ARUN DISTRICT COUNCIL A/168/18/RES

7. Conclusion

7.1 This study has been undertaken in accordance with the principles set out in NPPF 2018. We can conclude that providing the development adheres to the conditions advised in the conclusions of this report, the development proposals discussed within this report can be accommodated without increasing flood risk within the locality in accordance with objectives set by Central Government, the EA and West Sussex County Council SuDS Guidelines.

7.2 With reference to the Environment Agency (EA) national-scale flood mapping created on behalf of the EA, the redline application boundary of the site is located within Flood Zone 1. The proposed development has an annual probability of fluvial or tidal flooding less than 0.1% (1 in 1000) in any given year. The development is classed as 'More Vulnerable' due to its residential use, and under the principles of the Sequential Test it is deemed appropriate.

7.3 The main risk of flooding to the site is from surface waters. Part of the site is exposed to risk of surface water flooding with depths of up to 300mm during rainfall events having annual probability between 0.1% (1 in 1000) and 1 in 100 year (1%) in any given year - 'Low' risk of flooding.

7.4 The drainage strategy proposed herein is to discharge runoff to a ditch located on the site's western boundary, with outflow rates restricted to the site's Greenfield rates by a complex flow control device and attenuation storage volume provided within permeable paving and geocellular crate systems. The total storage required on-site is approximately 300m^3 during the 1 in 100 year event + 40% climate change with flows limited to 5.4 l/s.

7.5 In the event of drainage system failure, extreme rainfall events or blockage, flooding may occur within the site. In a drainage flooding event it, should be ensured water runoff should not impact the proposed building. To mitigate against this, the building's finished floor level should be raised 300mm above adjacent external ground levels, if feasible.

7.6 The Treatment train of Permeable Paving and Proprietary Treatment Systems is suitable to offer acceptable contamination treatment to runoff prior to being discharged to the ditch.

7.7 All onsite SuDS and drainage systems should be privately maintained. A long-term maintenance regime should be implemented by the residents as outlined in this report. In addition to a long-term maintenance regime, it is recommended that all drainage elements implemented on site should be inspected following the first rainfall event post construction and monthly for the first quarter following construction.

ARUN DISTRICT COUNCIL A/168/18/RES

Appendix 1 – Supporting Information

ARUN DISTRICT COUNCIL A/168/18/RES

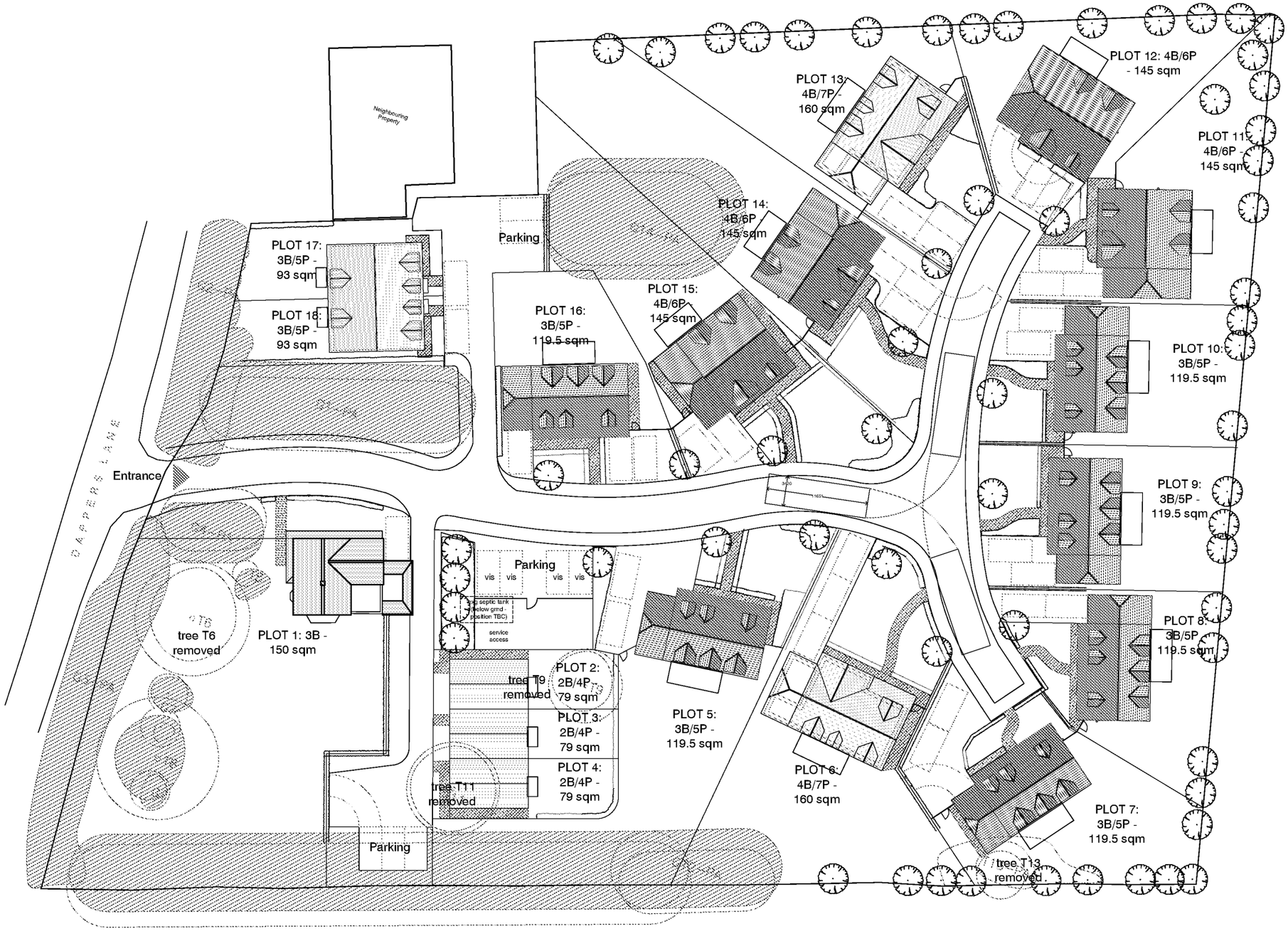

Area Schedule

Affordable housing: Plot 2,3,4,17 & 18
- 2x 3B/5P, 3x 2B/4P

Private: Plot 1 & 5-16
- 6x 3B/5P, 5x 4B/7P & 2x 4B/8P

Total GIA of whole development: 2190 sqm (Plots 1-18)

Parking spaces: 50 private spaces
4 visitor spaces
54 spaces total

NB: the 50 'private' spaces includes allowance for visitor parking wherever possible

0m 5 10 15 30m

1:500

N

mohsin cooper
ARCHITECTS

MOHSIN COOPER LIMITED, 7 HOVE MANOR PARADE,
HOVE STREET, HOVE, EAST SUSSEX, BN3 2DF
www.mohsincooper.com

© COPYRIGHT RIGHTS ON THIS DESIGN AND INFORMATION SHOWN ON THIS DRAWING

ARUN DISTRICT COUNCIL A/158/18/RES

REV	DATE	CHK
-	- -	-

THE CONTRACTOR MUST VERIFY ALL DIMENSIONS ON SITE BEFORE MAKING SHOP DRAWINGS OR COMMENCING WORK OF ANY KIND. NO DIMENSIONS TO BE SCALED FROM THIS DRAWING

1. THE BOUNDARIES SHOWN ARE BASED ON INFORMATION BY OTHERS. ALL BOUNDARIES TO BE VERIFIED ON SITE PRIOR TO COMMENCING CONSTRUCTION.
2. TOPOGRAPHICAL LEVELS TO BE CONFIRMED.
3. DESIGN & QUOTED AREAS ARE SUBJECT TO DESIGN DEVELOPMENT & STATUTORY CONSENTS.
4. ALL SURVEY INFORMATION SHOWN IS SUBJECT TO FURTHER SITE INVESTIGATION DURING DEMOLITION.

SCALE : 1:500 @ A3
DRAWN : MC **DATE :** Nov/2018
CHECKED : MC **DATE :** Nov/2018
STATUS: PLANNING APPROVAL

PROJECT :
MERRY ENGLAND NURSERY, DAPPERS LANE, ANGMERING.
CLIENT :
Peter Nicholas Homes (Dappers Lane) Ltd
DRAWING TITLE :
Masterplan

NUMBER:
0277-P010
REVISION:
-

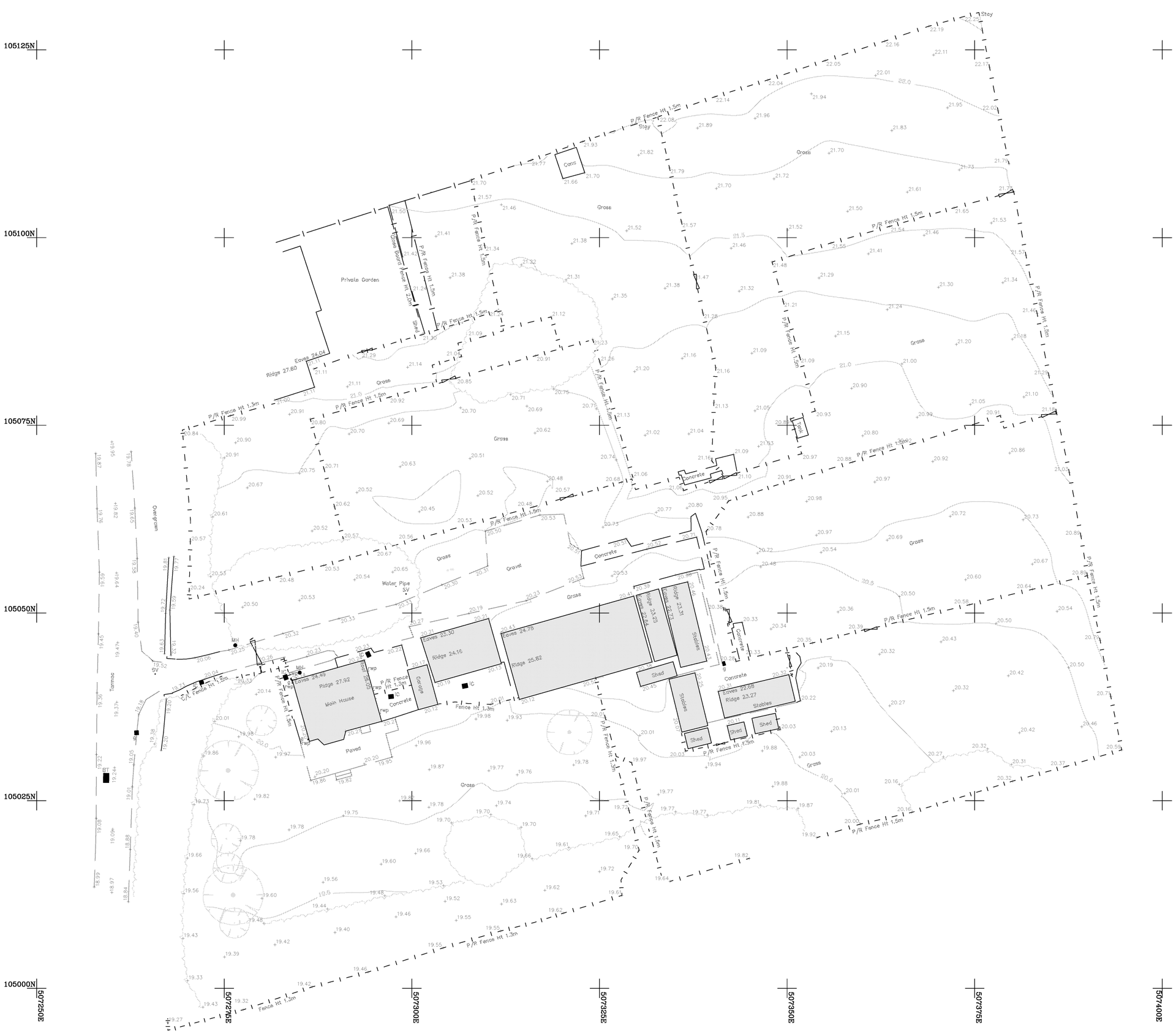

Notes:

All measurements in metres.
Grid and heights relate to Ordnance Survey (GPS) datum.

Do not scale from document, all dimensions to be checked on site.

The measured survey displayed on the page does not form part of a structural survey. Whilst we have taken every care to measure the property, we have not measured any areas that are hidden or concealed or where reasonable access is unavailable.

No assumptions should be made to both the construction type or material of any detail on the plans.

copyright Trueplan (UK) Ltd 2018

Project:
Merry England Nursery
Topographical Survey
Dappers Lane
Angmering
West Sussex

Job no.: 25532/4546

Revision: 1

Drawn on: 19-12-2018

Drawn by: D.Hemsley

Client:

Stiles Harold Williams

Scale: 1:250 @A1

Trueplan (UK) Ltd
Mount Pleasant House
2-6 Lonsdale Gardens
Tunbridge Wells
Kent TN1 1HJ
01892 614881

plans@trueplan.co.uk
trueplan.co.uk
@Trueplanuk
facebook.com/trueplan

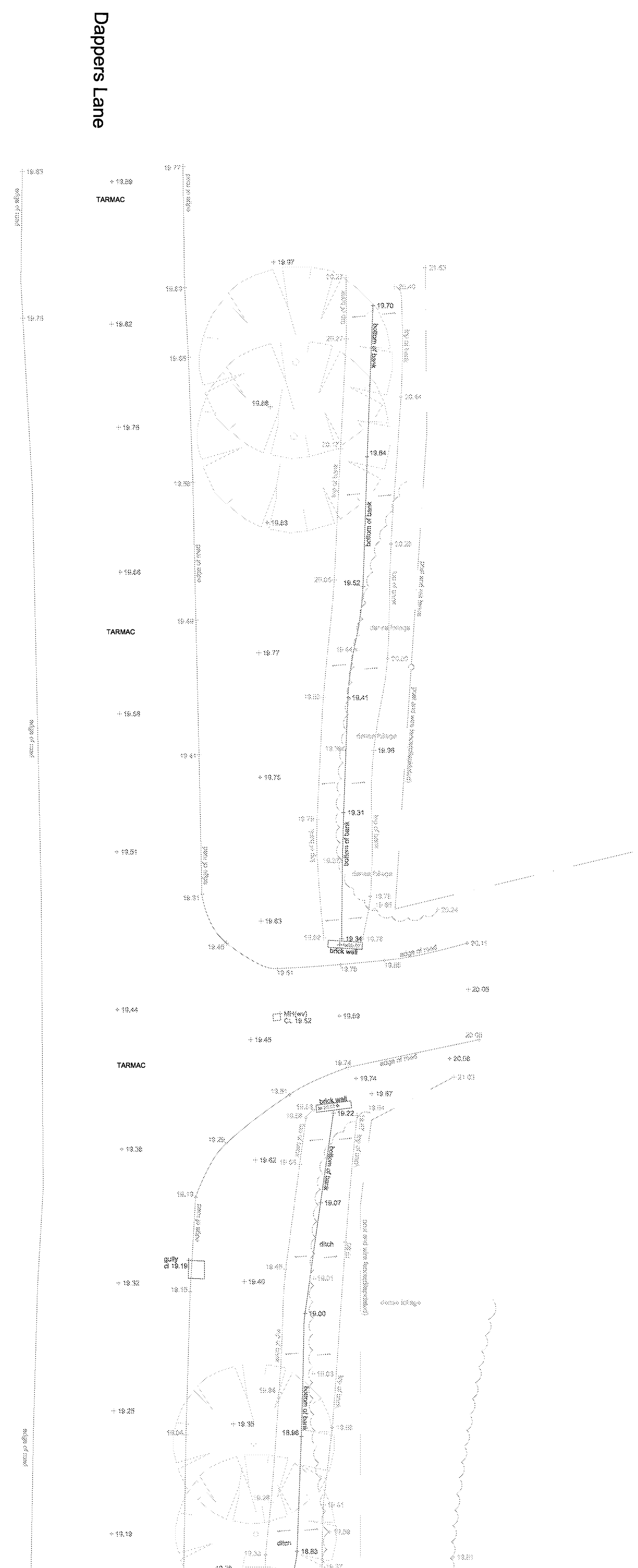

Scale Bar (meters)
0 5 10 15 20

NOTES
SURVEY IS BASED ON OS GRID SYSTEM
ORIGINATING FROM STATION 1
@ E 507256.678, N 104999.008, RL 18.986

LAYER INFORMATION

0	EMPTY
Bank	Downhill bank arrows
Bottom of Bank	Bottom of bank / slope
BT	Telecom box and manholes
Buildinglines	Building outline
Edge of Concrete	Edge of concrete surface
Edge of Road	Edge of road surface
External Steps	External Step lines
Fenceline	Handrails, fence and boundary lines
Flow	Waste water flow
Footpath	Edge of footpath or surface changes
Gardenline	Edge of lawns, flower beds and garden surface changes
Gate	Gate and swing lines
Gully	Water drainage
Hedgeline	Edges of significant hedges
Kerbline	Front kerbline
Lamp Post	Lamp pots and lighting
Manhole	Manholes and utility covers
Overhead Cables	Overhead cables and utility poles
Plant	Significant ventilation and external plant
Road Markings	Significant road markings
Rooflines	Ridges, eaves, hips and valley lines
Scrubline	Edges of dense or overgrown foliage
Sign Post	Sign posts and street signs
Spotlevels	Point elevations
Spotlevels text	Point elevations text
Survey Stations	GPS reference survey stations
Text	Notation
Top and Back of Kerb	Top and back line of Kerb
Top of Bank	Top line of bank
Tree	Tree bore and spread
Unclassified Structure	Other structures
Wall	Walls

Line types and Symbols

Building Lines		Garden Line	
Rooflines		Scrub Line	Scrub
Top & Back of Kerb	100.40	Gullies	Gully 100.19, SWP, RWP
Edge of Surface / Footpath	100.40	Man holes & Flow	dia:80, MH CL:100.40 IL:99.40, dia:100
Edge of Road	100.40	Trees	
Edge of Concrete	100.40	Spot Levels	100.40
Top of bank	100.40	Road Markings	
Bottom of bank	100.40	Hedge Line	Hedge
Fence / Handrail		Walls	100.40
Overhead Cables		Steps	100.40
		Plant	Plant
		Gates	Gate:1.90

Control Stations

Co-ordinates in OSGB

Point Number	Easting	Northing	Elevation	Description
Stn1	507256.678	104999.008	18.986	WOOD PEG
Stn2	507264.706	105042.505	19.490	HILTI NAIL
Stn3	507307.861	105046.661	20.228	HILTI NAIL

Orientation

North

Rev.	Date	Description

Client
PNH Properties Group

SeSurveying

Drawing Title
Topographical Survey

Job Title
Merry England Nurseries Revisit
Dappers Lane, Angmering, BN16 4EN

Scale	Date	Drawn	Job No.	Drawing No.	Rev.
1:100 @ A1	20/02/19	RO	016 02 19	001	
	Surveyed by RO	Checked CH			

ARUN DISTRICT COUNCIL A/168/18/RES

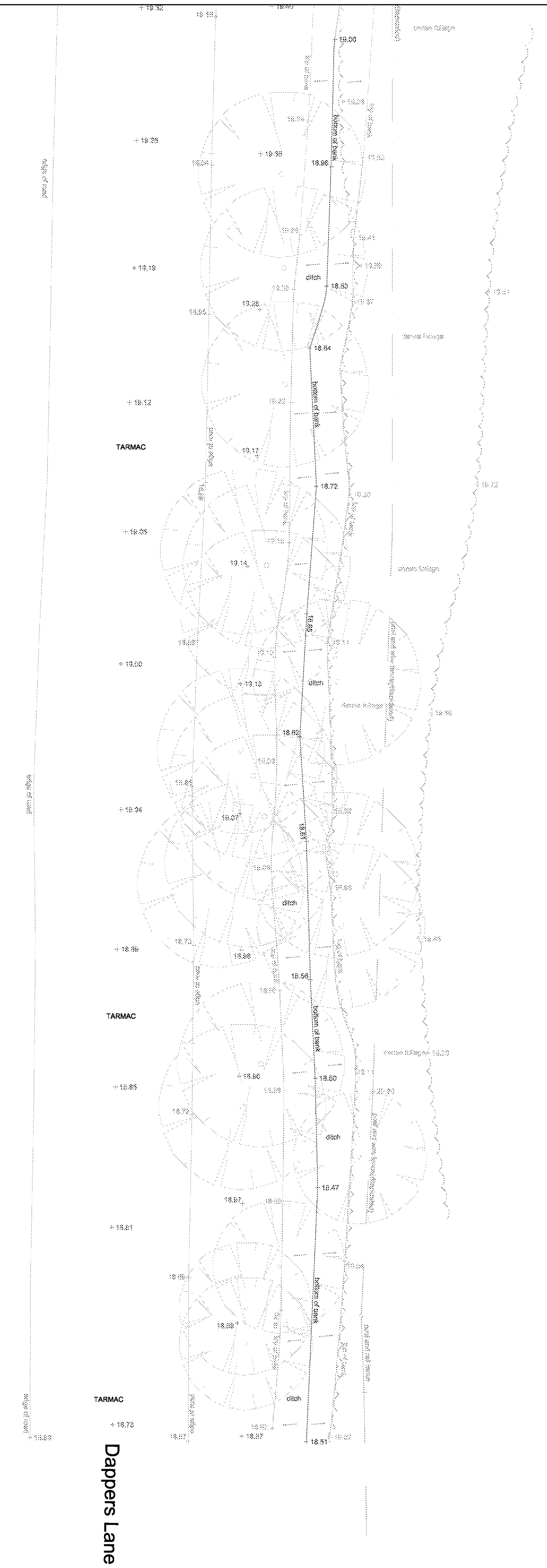

Scale Bar (meters)

0 5 10 15 20

NOTES
SURVEY IS BASED ON OS GRID SYSTEM
ORIGINATING FROM STATION 1
@ E 507256.678, N 104999.008, RL 18.986

LAYER INFORMATION

0	EMPTY
Bank	Downhill bank arrows
Bottom of Bank	Bottom of bank / slope
BT	Telecom box and manholes
Buildinglines	Building outline
Edge of Concrete	Edge of concrete surface
Edge of Road	Edge of road surface
External Steps	External Step lines
Fenceline	Handrails, fence and Boundary lines
Flow	Waste water flow
Footpath	Edge of footpath or surface changes
Gardenline	Edge of lawns,flower beds and garden surface changes
Gate	Gate and swing lines
Gully	Water drainage
Hedgeline	Edges of significant hedges
Kerbline	Front kerbline
Lamp Post	Lamp pots and lighting
Manhole	Manholes and utility covers
Overhead Cables	Overhead cables and utility poles
Plant	Significant ventilation and external plant
Road Markings	Significant road markings
Rooflines	Ridges, eaves, hips and valley lines
Scrubline	Edges of dense or overgrown foliage
Sign Post	Sign posts and street signs
Spotlevels	Point elevations
Spotlevels text	Point elevations text
Survey Stations	GPS reference survey stations
Text	Notation
Top and Back of Kerb	Top and back line of Kerb
Top of Bank	Top line of bank
Tree	Tree bore and spread
Unclassified Structure	Other structures
Wall	Walls

Line types and Symbols

Building Lines
Rooflines
Top & Back of Kerb
Edge of Surface / Footpath
Edge of Road
Edge of Concrete
Top of bank
Bottom of bank
Fence / Handrail
Overhead Cables
Garden Line
Scrub Line
Gullies — Gully 100.19, SWP, RWP
Man holes & Flow — dia:80, MH, CL:100.40, IL:99.40, dia:100
Trees
Spot Levels — 100.40
Road Markings
Hedge Line — Hedge
Walls — 100.40
Steps
Plant — Plant
Gates — Gate:1.90

Control Stations

Co-ordinates in OSGB				
Point Number	Easting	Northing	Elevation	Description
Stn1	507256.678	104999.008	18.986	WOOD PEG
Stn2	507264.706	105042.505	19.490	HILTI NAIL
Stn3	507307.861	105046.661	20.228	HILTI NAIL

Orientation

North

Rev.	Date	Description

Client
PNH Properties Group

SeSurveying

Drawing Title
Topographical Survey

Job Title
Merry England Nurseries Revisit
Dappers Lane, Angmering, BN16 4EN

Scale	Date	Drawn	Job No.	Drawing No.	Rev.
1:100 @ A1	20/02/19	RO	016 02 19	002	
	Surveyed by RO	Checked CH			

ARUN DISTRICT COUNCIL A/168/18/RES

Appendix 2 – Preliminary Surface Water Drainage Strategy Layout

ARUN DISTRICT COUNCIL A/168/18/RES

THE DRAINAGE STRATEGY TO BE FURTHER ASSESSED AT THE DETAILED DESIGN STAGE AND AMENDED AS NECESSARY. ALL PROPOSED LEVELS ARE ASSUMED AND SHOULD BE CONFIRMED BY LANDSCAPING ARCHITECT/CLIENT. DESIGN SUBJECT TO WIDER CONSTRUCTION DETAILS.
ALL WORKS TO THE DITCH AND RUNOFF DISCHARGES TO BE CONFIRMED BY THE LPA.

THE SITE IS STEEPLY SLOPING FROM N-E (>22mAOD) TO S-W (<19mAOD). THE PROPOSED DRIVEWAY IS LOCATED CENTRALLY ACROSS THE SITE RUNNING WEST TO EAST FOR THE MOST PART AND COINCIDES WITH A FLAT TOPOGRAPHY ALONG THIS LENGTH. THE OTHER BRANCHES OF THE PROPOSED ROAD ARE MAINLY ON THE STEEPER N-E AXIS.
THE MAJORITY OF BUILDINGS WOULD BE LOCATED TO THE NORTH OF THE FLATTER W-E AXIS.

SOIL INFORMATION FROM THE *SOILSCAPES* WEBSITE INDICATES THAT THE SUPERFICIAL DEPOSITS AT THE SITE SITE ARE PREDOMINANTLY CLAYEY WITH IMPEDED DRAINAGE. IN ABSENCE OF BESPOKE INFILTRATION TESTING NO INFILTRATION RATES WERE ASSUMED FOR THE SUDS STRATEGY.
IT IS RECOMMENDED THAT SHALLOW INFILTRATION TESTING TO BRE365 IS CONDUCTED IN THE FLATTER DRIVEWAY REGION PRIOR TO DETAILED DESIGN AND THE CALCULATIONS AMENDED TO SUIT RESULTS.

THE DRAINAGE STRATEGY IMITATES THE GREENFIELD SETTING AS CLOSE AS POSSIBLE BY USING PERMEABLE PAVEMENTS (TYPE B), GEOCELLULAR CRATE SYSTEMS AND COMPLEX FLOW CONTROL DEVICES.

PERMEABLE PAVING IS PROPOSED FOR THE ENTIRE DRIVEWAY FOR RUNOFF INTERCEPTION, TREATMENT AND CONVEYANCE. RUNOFF ATTENUATION STORAGE HAS BEEN ALLOWED ONLY IN THE FLATTER SECTION OF THE DRIVEWAY. DUE TO THE LARGE RUNOFF STORAGE REQUIREMENTS OF THE DEVELOPMENT (ASSOCIATED WITH THE IMITATION OF THE GREENFIELD REGIME POST-DEVELOPMENT) IT IS RECOMMENDED TO PROVIDE GEOCELLULAR CRATES BELOW THE PERMEABLE PAVING. THE PLACEMENT OF THE CRATES TAKES INTO ACCOUNT THE SITE'S SLOPES, CONSTRUCTION REQUIREMENTS, LONG-TERM MAINTENANCE AND CURRENT DESIRED DEVELOPMENT LAYOUT.

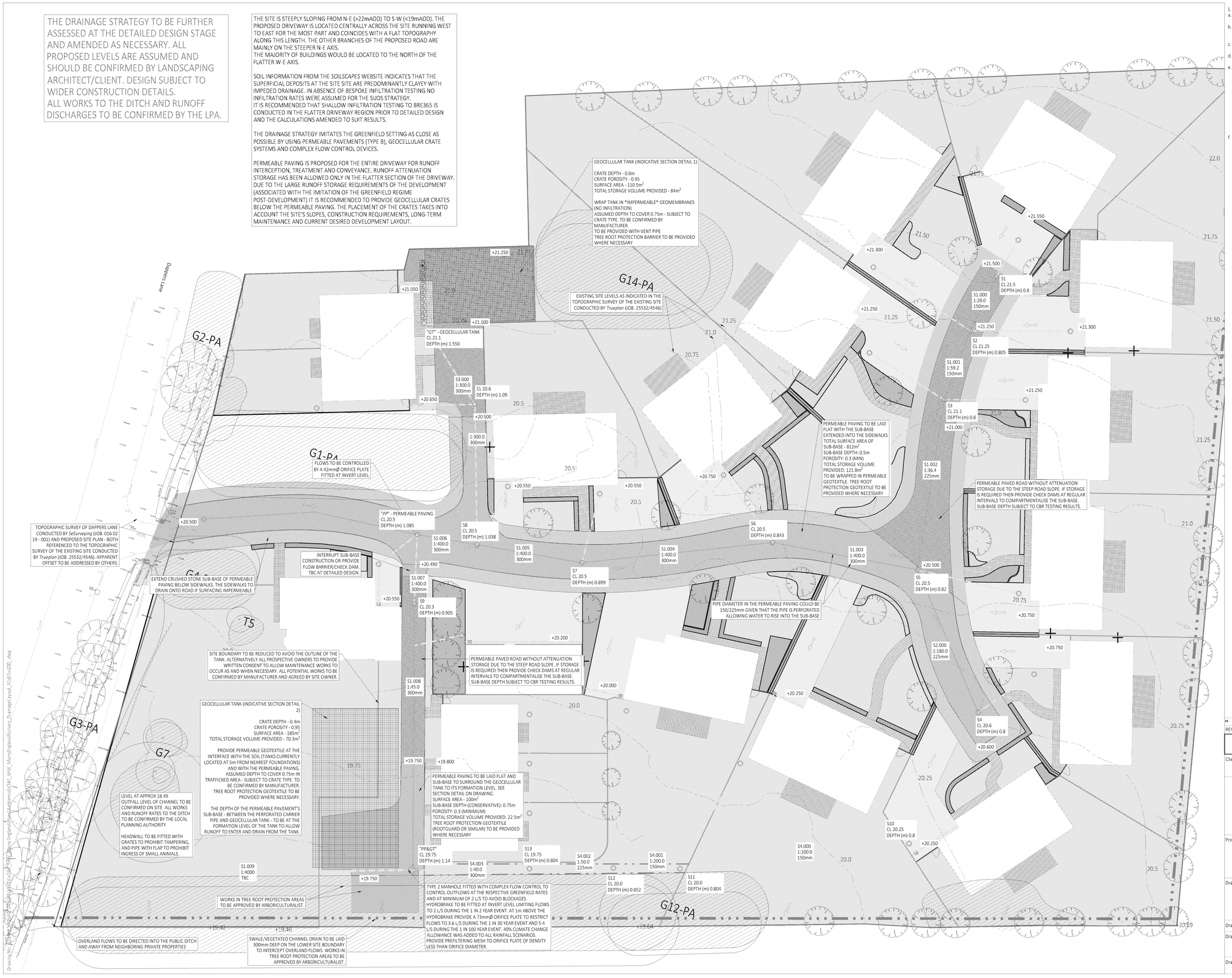

1. GENERAL
a. THIS DRAWING IS NOT TO BE SCALED, WORK TO FIGURED DIMENSIONS ONLY, CONFIRMED ON SITE.
b. THIS DRAWING IS TO BE READ IN CONJUNCTION WITH ALL RELEVANT ARCHITECTURAL DRAWINGS, DETAILED SPECIFICATIONS WHERE APPLICABLE AND ALL ASSOCIATED DRAWINGS IN THIS SERIES.
c. ANY DISCREPANCY ON THIS DRAWING IS TO BE REPORTED IMMEDIATELY TO THE PARTNERSHIP FOR CLARIFICATION.
d. THE CONTRACTOR IS RESPONSIBLE FOR ALL TEMPORARY WORKS AND FOR THE STABILITY OF THE WORKS IN PROGRESS.
e. CDM REGULATIONS 2015. ALL CURRENT DRAWINGS AND SPECIFICATIONS MUST BE READ IN CONJUNCTION WITH THE DESIGNER'S HAZARD RISK AND ENVIRONMENT ASSESSMENT RECORD. DESIGN HAS BEEN PRODUCED BASED ON INFORMATION PROVIDED BY THE CLIENT/PRINCIPLE DESIGNER AVAILABLE AT TIME OF ISSUE. CONTRACTOR TO REVIEW DRAWING AND SPECIFICATION IN CONTEXT WITH THE WIDER SITE AND SPECIFIC SITE INVESTIGATION, CONTAMINIATION ASSESSMENT, ASBESTOS SURVEY, ENVIRONMENTAL SURVEY, UXO SURVEY AND ANY OTHER RELEVANT INFORMATION AND MANAGE RISKS RELATING TO THE WORKS OUTLINED IN THE DRAWINGS AND SPECIFICATION. PRINCIPLE CONTRACTOR TO MAKE DESIGNER AND CLIENT AWARE OF SITE SPECIFIC RISKS THAT MAY AFFECT THE DRAWING AND SPECIFICATION.
f. CDM REGULATIONS 2015. FOR GENERIC MAINTENANCE AND MANAGEMENT RISKS REFER TO CHAPTER 36 OF CIRIA 752 SUDS MANUAL. FOR PROPRIETARY SYSTEMS SEE MANUFACTURER'S MANAGEMENT AND MAINTENANCE DETAILS AND RISK ASSESSMENT WITH REGARDS TO MAINTENANCE OF PROPRIETARY SYSTEMS.

LEGEND
PRIVATE SURFACE WATER DRAIN
PERFORATED SURFACE WATER DRAIN
SLOT/CHANNEL DRAIN
TYPE 2 MANHOLE
TYPE 3 INSPECTION CHAMBER
TYPE 4 INSPECTION CHAMBER
RODDING EYE
RAIN WATER PIPE
ROAD GULLY
PERMEABLE PAVING
ATTENUATION SYSTEM
+26.500 PROPOSED LEVEL
OVERLAND FLOW ROUTE

REV	DATE	CKD	APPD	BY	DESCRIPTION
##	XX.XX.XX	--	--	--	--

PRELIMINARY DRAWING
FOR INFORMATION ONLY. NOT FOR CONSTRUCTION.

Client
PETER NICHOLAS HOMES LTD

AMBIENTAL
ENVIRONMENTAL ASSESSMENT
The Sussex Innovation Centre | Science Park Square | Falmer | Brighton |BN1 9SB
Tel +44 (0) 203 857 8530 | www.ambiental.co.uk | drainage@ambiental.co.uk

Project
MERRY ENGLAND NURSERY, BN16 4EN
PROJECT NO 4383

Drawing
SURFACE WATER DRAINAGE STRATEGY
PROPOSED LAYOUT

Drawn by: SD
Date: FEB-2019

Drawing No.
4383-01

Revision
-

Drawing Scale: 1:200 @ A1
0 2m 4m 6m 8m 10m

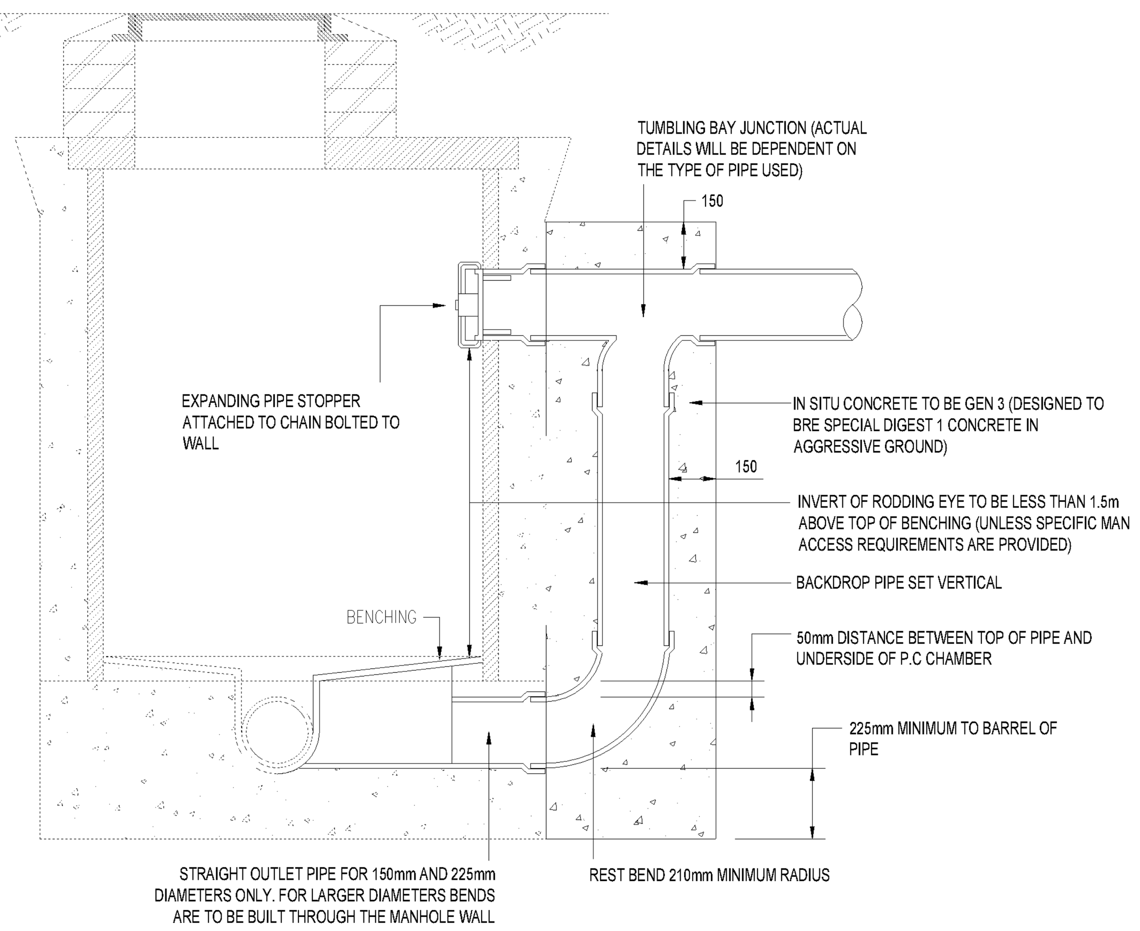

BACKDROP CONSTRUCTION

(1:20)

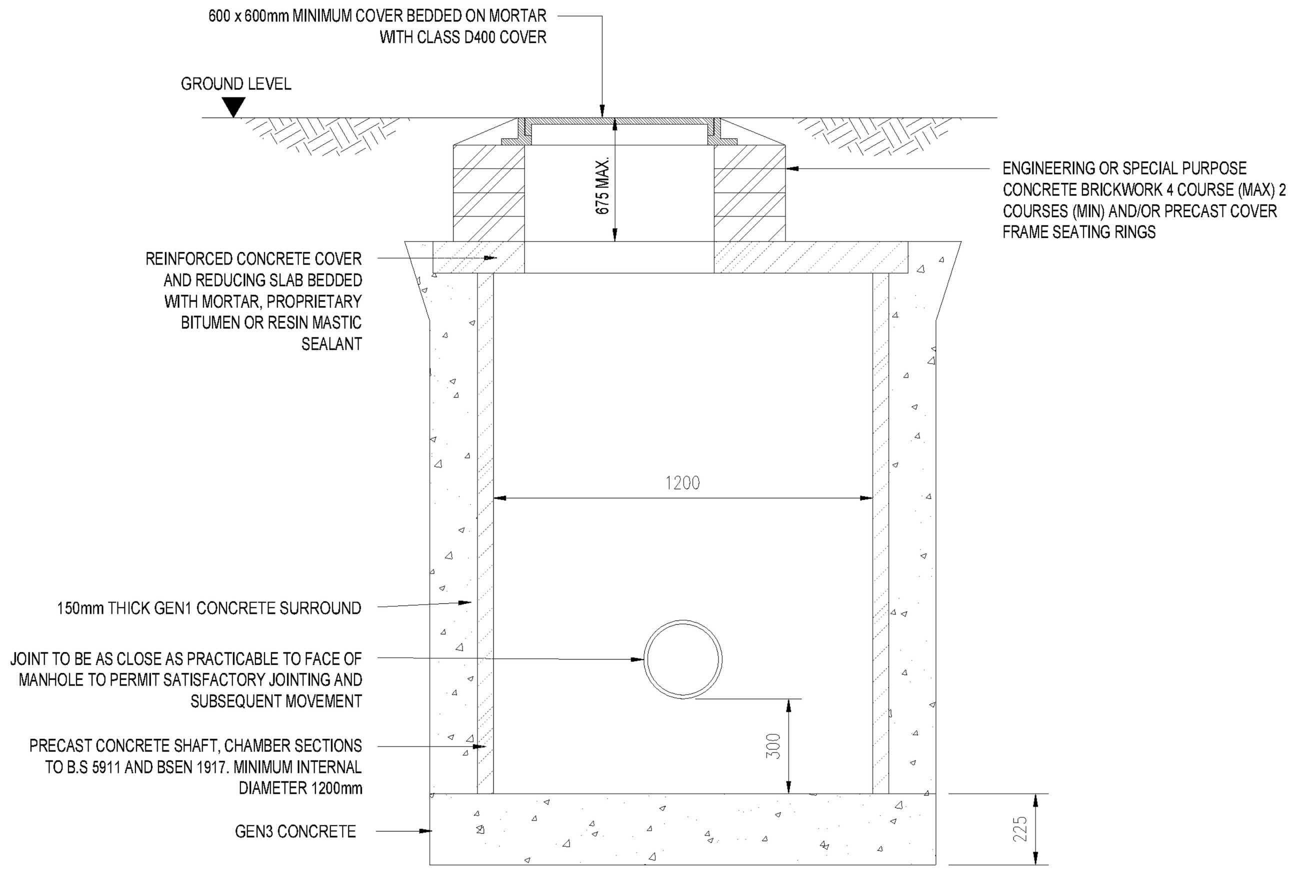

CATCHPIT TO INVERT 0.9m TO 2.7m.

(1:20)

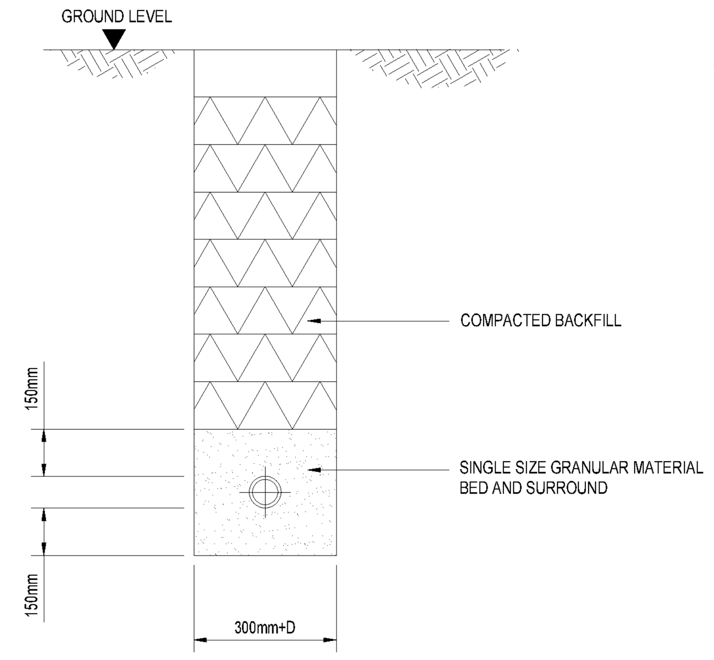

CLASS S GRANULAR BEDDING DETAIL.

(WHERE COVER >900mm)

(1:20)

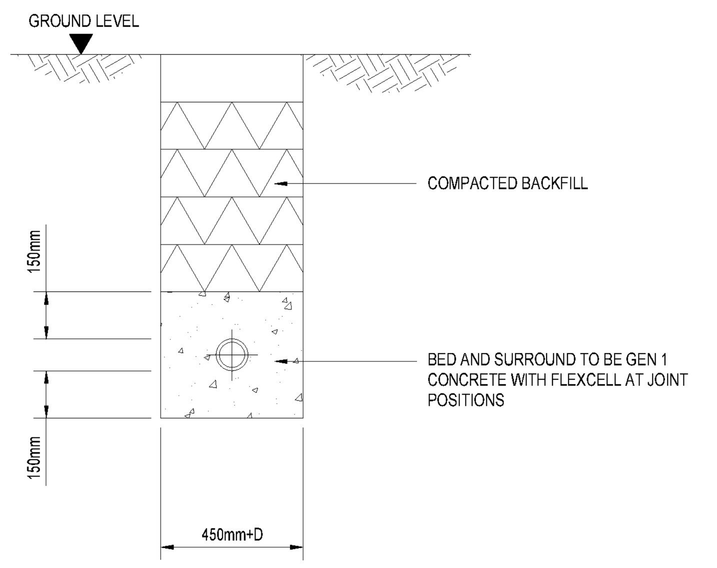

CONCRETE BEDDING DETAIL.

(WHERE COVER <900mm)

(1:20)

NOTE

ALL BACKFILLING AND REINSTATEMENT WITHIN ROADS AND STREETS TO BE IN ACCORDANCE WITH THE HIGHWAY AUTHORITY AND HAUC SPECIFICATION.

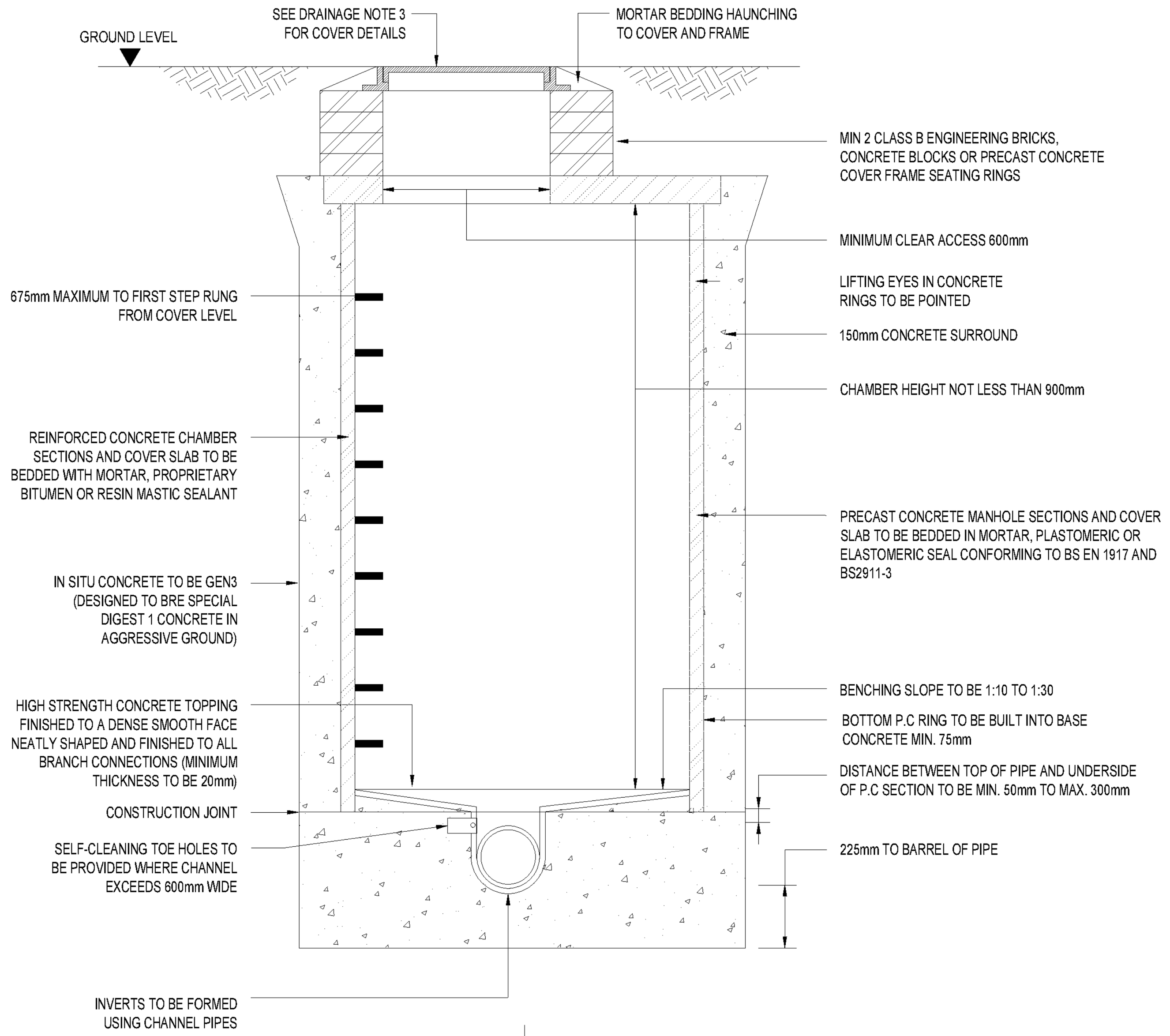

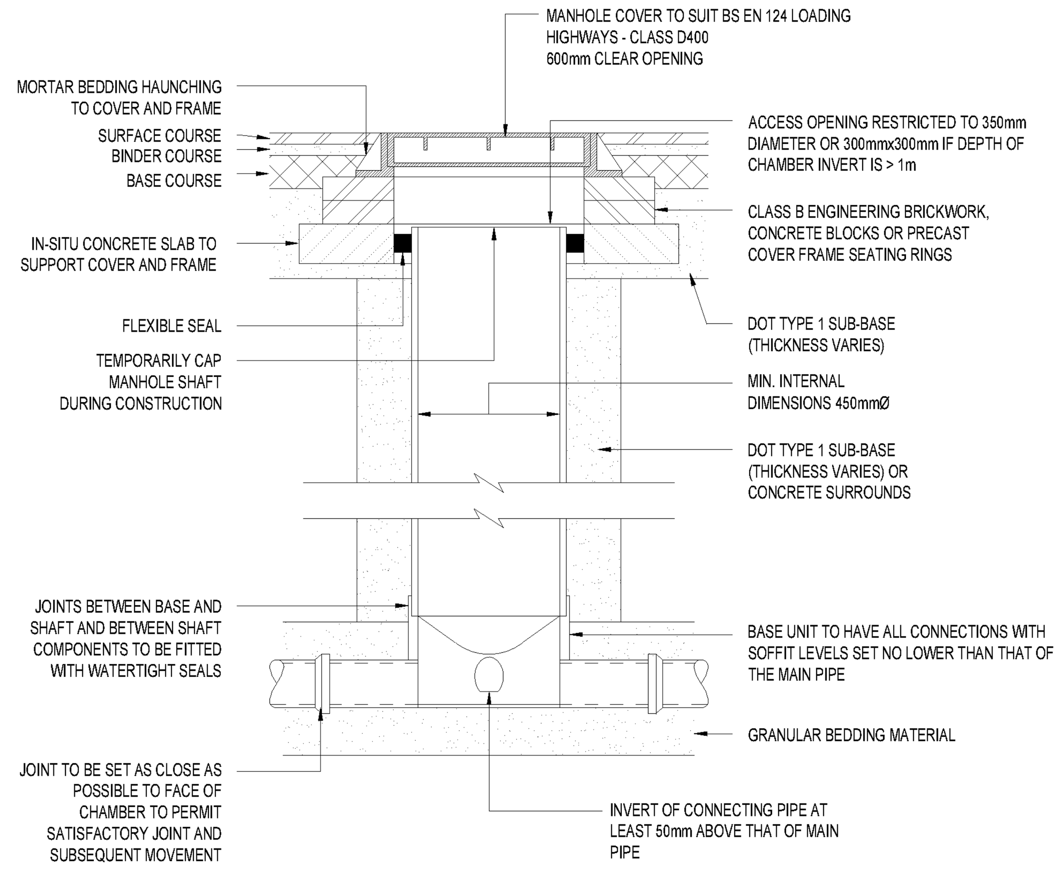

TABLE 1

NOMINAL DIAMETER (mm)	EFFECTIVE LENGTH OF ROCKER PIPE (m)
150 TO 600	0.6
>600 TO 750	1.0
>750	1.2

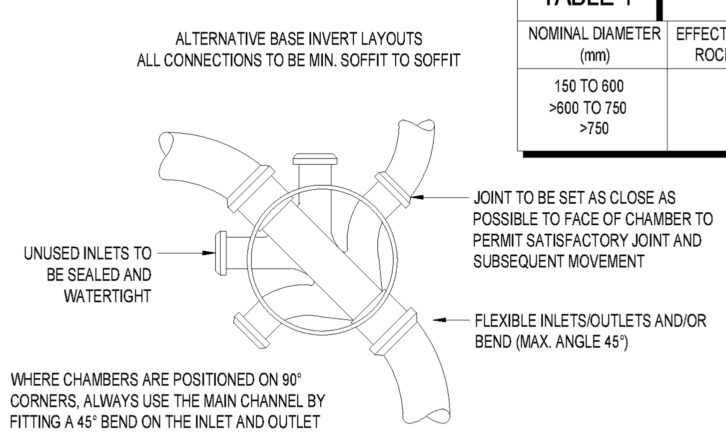

TYPE 3 ACCESS CHAMBER - FLEXIBLE MATERIAL.

(SUBJECT TO VEHICLE LOADING, MAX. DEPTH 3m, NON-ENTRY)

(1:20)

TYPE 3&4 CHAMBER TYPES, SIZES AND DEPTH

BASE/SHAFT DIA (mm)	200	315	450	600
SFA7 TYPE	4	4	3 – 4	3 – 4
NO OF INLETS 1	Y	Y	Y	Y
1 TO 3	-	Y	Y	Y
4 TO 5	–	–	Y	–
INLET SIZES (mm)	110/160	110/160	110/160	150/225/300
MAX DEPTH(mm)	600	600	1200	3000

FOR DEPTH GREATER THAN 1200mm RESTRICT ACCESS TO 450mm DIAMETER

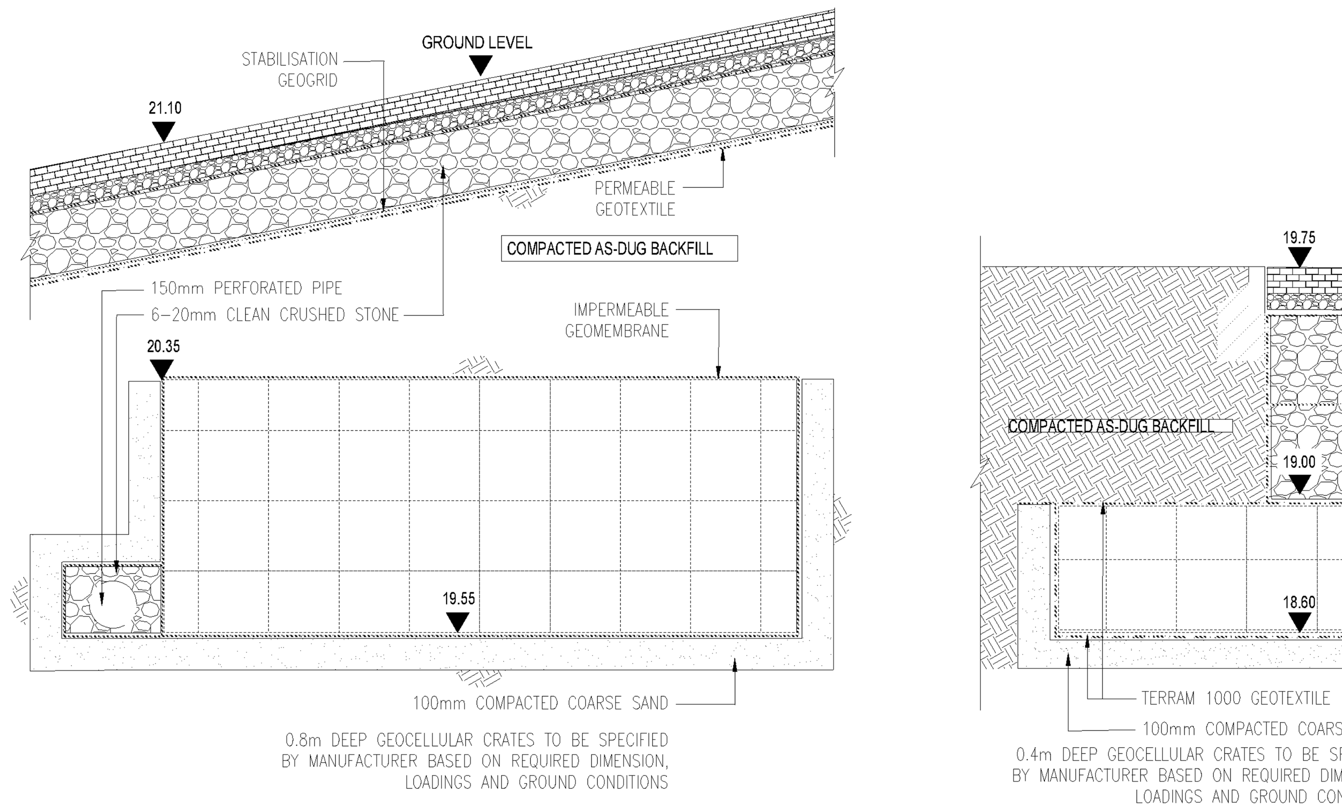

GEOCELLULAR TANK - INDICATIVE SECTION DETAIL 1

(1:20)

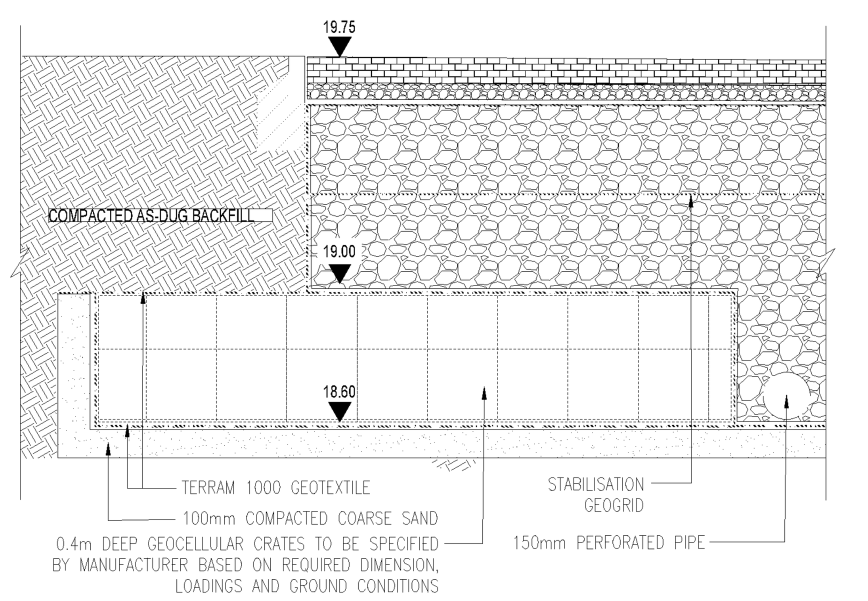

GEOCELLULAR TANK - INDICATIVE SECTION DETAIL 2

(1:20)

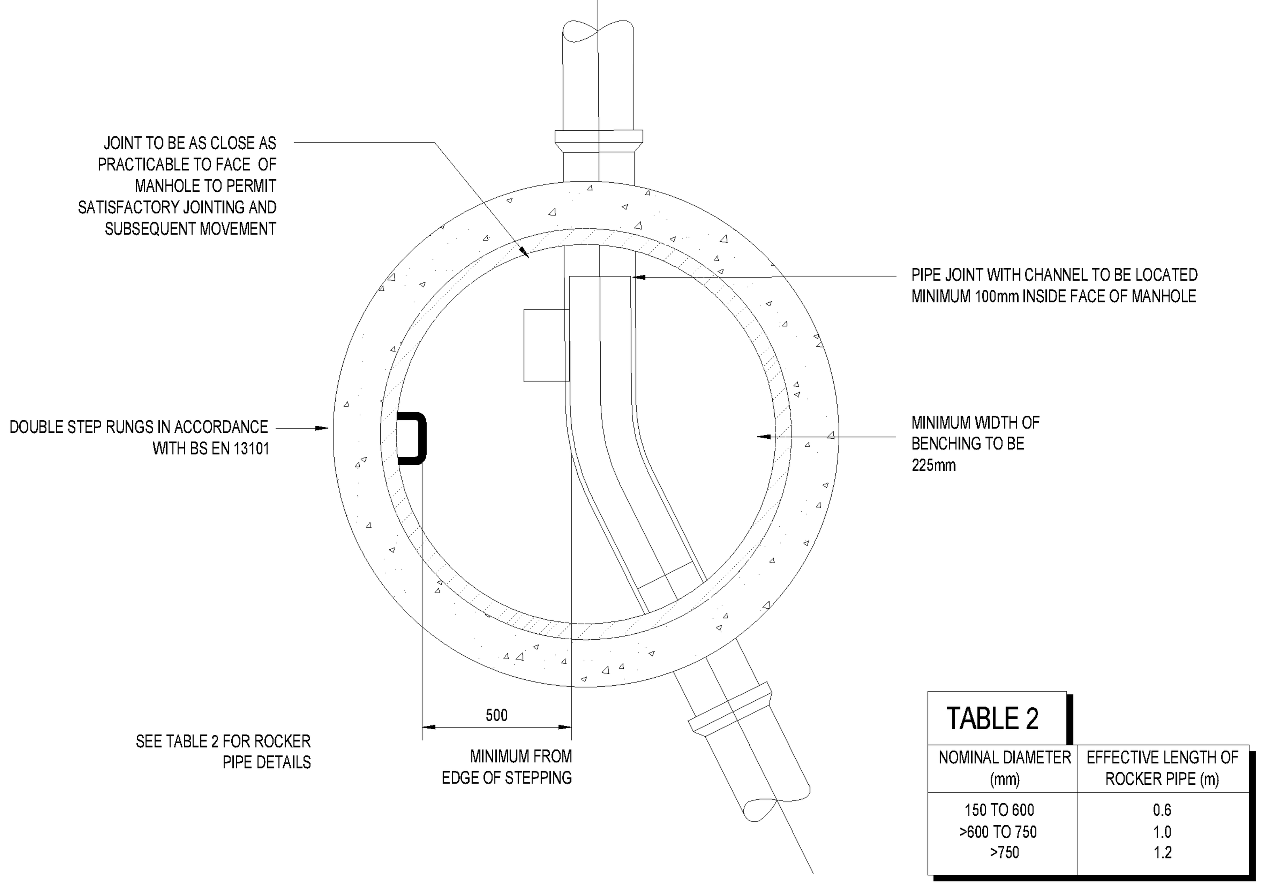

TABLE 2

NOMINAL DIAMETER (mm)	EFFECTIVE LENGTH OF ROCKER PIPE (m)
150 TO 600	0.6
>600 TO 750	1.0
>750	1.2

TYPE 2 MANHOLE.

(DEPTH FROM COVER LEVEL TO SOFFIT OF PIPE LESS THAN 3.0m)

(1:20)

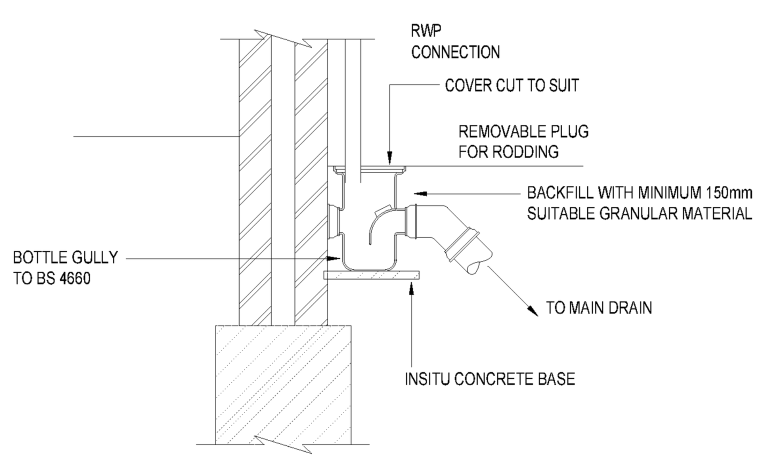

TRAPPED RWP CONNECTION.

(1:20)

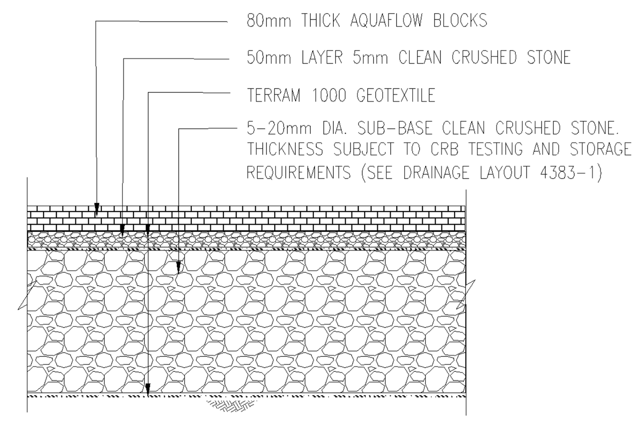

TYPICAL PERMEABLE PAVING DETAIL

(1:20)

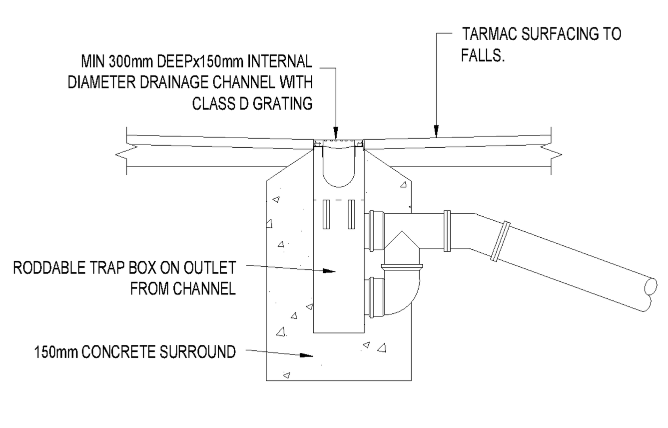

CHANNEL DRAIN OUTLET

(1:20)

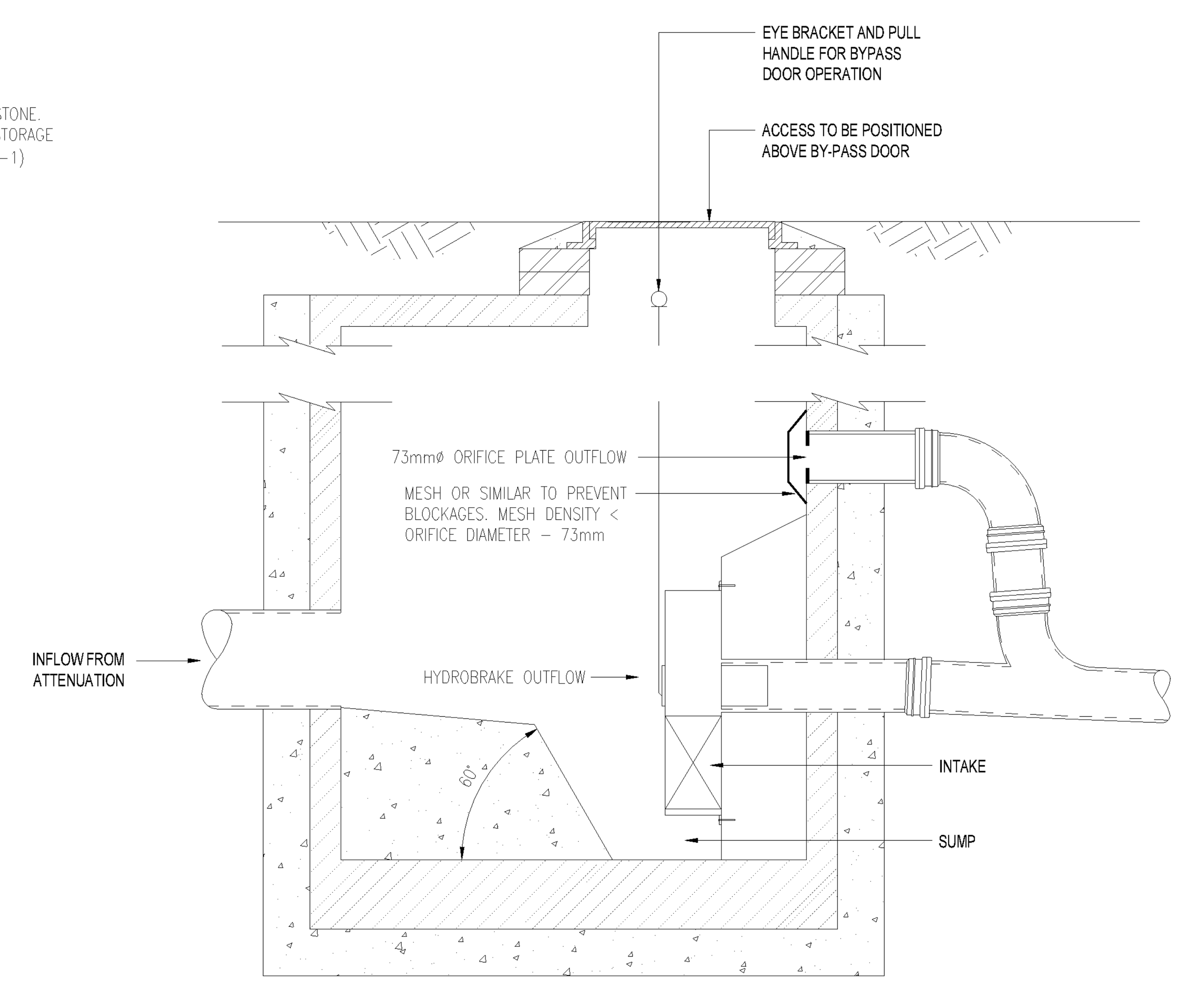

COMPLEX FLOW CONTROL MANHOLE

(1:20)

1. GENERAL
(i) THIS DRAWING IS NOT TO BE SCALED, WORK TO FIGURED DIMENSIONS ONLY, CONFIRMED ON SITE.
(ii) THIS DRAWING IS TO BE READ IN CONJUNCTION WITH ALL RELEVANT ARCHITECTURAL DRAWINGS, DETAILED SPECIFICATIONS WHERE APPLICABLE AND ALL ASSOCIATED DRAWINGS IN THIS SERIES.
(iii) ANY DISCREPANCY ON THIS DRAWING IS TO BE REPORTED IMMEDIATELY TO THE PARTNERSHIP FOR CLARIFICATION.
(iv) THE CONTRACTOR IS RESPONSIBLE FOR ALL TEMPORARY WORKS AND FOR THE STABILITY OF THE WORKS IN PROGRESS.

2. DRAINAGE GENERAL
(i) ALL FOUL AND STORM WATER DRAINS WHICH ARE NOT TO BE ADOPTED AS PUBLIC SEWERS UNDER A SECTION 104 AGREEMENT MUST BE CONSTRUCTED IN ACCORDANCE WITH THE BUILDING REGULATIONS, BS EN 752 AND WHERE APPROPRIATE THE RELEVANT AGREEMENT CERTIFICATES.
(ii) MANHOLES, GULLIES, GULLY CONNECTIONS, SEWERS AND OTHER SEWERAGE STRUCTURES INTENDED TO CONVEY SURFACE WATER ARE TO BE CONSTRUCTED IN ACCORDANCE WITH THE WATER AUTHORITIES ASSOCIATION SPECIFICATION 'SEWERS FOR ADOPTION' 7TH EDITION AND RELEVANT COUNCIL DESIGN GUIDE.
(iii) ALL CONCRETE USED IN DRAINAGE WORKS TO COMPLY WITH BRE DIGEST 363 FOR CLASS 2 SULPHATE CONDITIONS.

3. MANHOLE COVERS AND FRAMES
(i) MANHOLE COVERS TO BE CLASS D400 IN HIGHWAYS, CLASS B125 IN FOOTWAYS AND VERGES, CLASS A15 IN NON-TRAFFICKED AREAS.
(ii) MANHOLE COVER AND FRAME TO BE BEDDED AND SURROUNDED IN 1:3 MORTAR.

4. MANHOLE RINGS, COVER SLABS & TAPERS
(i) PRECAST CONCRETE MANHOLE UNITS SHALL COMPLY WITH THE REQUIREMENTS OF BS 5911. THE RELEVANT ABSORPTION TESTS REQUIRED SHALL BE CARRIED OUT ON A SAMPLE OF THOSE RINGS AND SLABS USED UNLESS A CERTIFICATE OF TESTING IS SUPPLIED BY THE MANUFACTURER. COVER SLABS SITUATED UNDER CARRIAGEWAYS OR TRAFFICKED AREAS SHALL BE HEAVY DUTY AND THOSE ELSEWHERE SHALL BE LIGHT DUTY. MANHOLE UNITS SHALL BE COMPLETE WITH STEP IRONS IF REQUIRED.

5. PIPES
(i) PLASTIC PIPES SHALL BE OF UNPLASTICISED POLYVINYL CHLORIDE (UPVC) COMPLYING WITH THE REQUIREMENTS OF BS EN 1401.
(ii) CONCRETE PIPES SHALL BE SPUN BY A CENTRIFUGAL PROCESS OR BE VERTICALLY PRESSED. THEY SHALL POSSESS SELF INVERTING SOCKETS AND SHALL COMPLY WITH WITH THE REQUIREMENTS OF AND BE TESTED IN ACCORDANCE WITH BS 5911.
(iii) SOLID WALL CONCENTRIC EXTERNAL RIB-REINFORCED UNPLASTICISED PVC PIPE SHALL COMPLY WITH ASTM A978.
(iv) ALL VITRIFIED CLAY PIPES TO BE IN ACCORDFANCE WITH BS EN 295.
(v) ALL PIPE CONNECTIONS TO MHS AND CATCH PITS TO HAVE MIN 600MM ROCKER PIPE AS CLOSE AS PRACTICABLE TO CHAMBER WALL.

6. GULLY GRATES & FRAMES
(i) GULLY GRATES AND FRAMES FOR CARRIAGEWAY GULLIES SHALL COMPLY WITH BS EN 142. GULLIES SHALL BE PATTERN GB4-325 FOR ROADS BELOW 50 DV AND PATTERN GA2-450 FOR ROADS ABOVE 50 DV. GULLY GRATES AND FRAMES FOR KERB SIDE GULLIES SHALL BE PATTERN GK-115 FOR ROADS BELOW 50 DV AND GK-165 FOR ROADS ABOVE 50 DV. CURVED BAR GULLY GRATES SHALL BE USED IN ROADS WHERE THE GRADIENT EXCEEDS 4%.

XXXXXX … … …

REV DATE CKD APPD BY DESCRIPTION

PRELIMINARY DRAWING
FOR INFORMATION ONLY. NOT FOR CONSTRUCTION.

Client
PETER NICHOLAS HOMES LTD

ambiental

The Sussex Innovation Centre | Science Park Square | Falmer | Brighton | BN1 9SB
Tel +44 (0) 203 857 8530 | www.ambiental.co.uk | drainage@ambiental.co.uk

Project
MERRY ENGLAND NURSERY, BN16 4EN
PROJECT NO 4383

Drawing
SURFACE WATER DRAINAGE STRATEGY
DRAINAGE DETAILS

Drawn by: SD — Date: FEB-2019

Drawing No. 4383-02 — Revision -

Drawing Scale: 1:20 0 20 40

Drawing No: DRAWING_LOCATION

Appendix 3 – Calculations

ARUN DISTRICT COUNCIL A/168/18/RES

ICP SUDS Mean Annual Flood

Input

Return Period (years)	100	Soil	0.400
Area (ha)	0.469	Urban	0.000
SAAR (mm)	733	Region Number	Region 7

Results	**l/s**
QBAR Rural	1.7
QBAR Urban	1.7
Q100 years	5.4
Q1 year	1.4
Q30 years	3.8
Q100 years	5.4

©1982-2018 Innovyze

Time Area Diagram for Storm

Time (mins)	Area (ha)	Time (mins)	Area (ha)
0-4	0.123	4-8	0.010

Total Area Contributing (ha) = 0.133

Total Pipe Volume (m^3) = 0.353

©1982-2018 Innovyze

STORM SEWER DESIGN by the Modified Rational Method

Network Design Table for Storm

PN	Length (m)	Fall (m)	Slope (1:X)	I.Area (ha)	T.E. (mins)	Base Flow (l/s)	k (mm)	HYD SECT	DIA (mm)	Section Type	Auto Design
1.000	10.000	0.125	80.0	0.133	4.00	0.0	0.600	o	150	Pipe/Conduit	
1.001	10.000	0.125	80.0	0.000	0.00	0.0	0.600	o	150	Pipe/Conduit	

Network Results Table

PN	Rain (mm/hr)	T.C. (mins)	US/IL (m)	Σ I.Area (ha)	Σ Base Flow (l/s)	Foul (l/s)	Add Flow (l/s)	Vel (m/s)	Cap (l/s)	Flow (l/s)
1.000	50.00	4.15	19.000	0.133	0.0	0.0	0.0	1.12	19.9	18.0
1.001	50.00	4.30	18.875	0.133	0.0	0.0	0.0	1.12	19.9	18.0

©1982-2018 Innovyze

Area Summary for Storm

Pipe Number	PIMP Type	PIMP Name	PIMP (%)	Gross Area (ha)	Imp. Area (ha)	Pipe Total (ha)
1.000	-	-	100	0.133	0.133	0.133
1.001	-	-	100	0.000	0.000	0.000
				Total	Total	Total
				0.133	0.133	0.133

Free Flowing Outfall Details for Storm

Outfall Pipe Number	Outfall Name	C. Level (m)	I. Level (m)	Min I. Level (m)	D,L (mm)	W (mm)
1.001		19.500	18.750	0.000	0	0

©1982-2018 Innovyze

2 year Return Period Summary of Critical Results by Maximum Level (Rank 1) for Storm

Simulation Criteria

Areal Reduction Factor 1.000 Additional Flow - % of Total Flow 0.000
Hot Start (mins) 0 MADD Factor * 10m³/ha Storage 2.000
Hot Start Level (mm) 0 Inlet Coeffiecient 0.800
Manhole Headloss Coeff (Global) 0.500 Flow per Person per Day (l/per/day) 0.000
Foul Sewage per hectare (l/s) 0.000

Number of Input Hydrographs 0 Number of Storage Structures 0
Number of Online Controls 0 Number of Time/Area Diagrams 0
Number of Offline Controls 0 Number of Real Time Controls 0

Synthetic Rainfall Details

Rainfall Model FEH Data Type Point
FEH Rainfall Version 2013 Cv (Summer) 0.750
Site Location GB 507331 105104 Cv (Winter) 0.840

Margin for Flood Risk Warning (mm) 0.0 DVD Status OFF
Analysis Timestep Fine Inertia Status OFF
DTS Status ON

Profile(s) Summer and Winter
Duration(s) (mins) 15, 30, 60, 120, 240, 360, 480, 960, 1440
Return Period(s) (years) 2, 30, 100
Climate Change (%) 0, 0, 0

PN	US/MH Name	Storm	Return Period	Climate Change	First (X) Surcharge	First (Y) Flood	First (Z) Overflow	Overflow Act.	Water Level (m)
1.000	1	15 Winter	2	+0%	2/15 Summer	30/15 Summer			19.267
1.001	2	15 Winter	2	+0%	2/15 Summer				19.070

PN	US/MH Name	Surcharged Depth (m)	Flooded Volume (m³)	Flow / Cap.	Overflow (l/s)	Pipe Flow (l/s)	Status	Level Exceeded
1.000	1	0.117	0.000	1.22		21.7	SURCHARGED	6
1.001	2	0.053	0.000	1.21		21.4	SURCHARGED	

©1982-2018 Innovyze

30 year Return Period Summary of Critical Results by Maximum Level (Rank 1) for Storm

Simulation Criteria

Areal Reduction Factor 1.000 Additional Flow - % of Total Flow 0.000
Hot Start (mins) 0 MADD Factor * 10m³/ha Storage 2.000
Hot Start Level (mm) 0 Inlet Coeffiecient 0.800
Manhole Headloss Coeff (Global) 0.500 Flow per Person per Day (l/per/day) 0.000
Foul Sewage per hectare (l/s) 0.000

Number of Input Hydrographs 0 Number of Storage Structures 0
Number of Online Controls 0 Number of Time/Area Diagrams 0
Number of Offline Controls 0 Number of Real Time Controls 0

Synthetic Rainfall Details

Rainfall Model FEH Data Type Point
FEH Rainfall Version 2013 Cv (Summer) 0.750
Site Location GB 507331 105104 Cv (Winter) 0.840

Margin for Flood Risk Warning (mm) 0.0 DVD Status OFF
Analysis Timestep Fine Inertia Status OFF
DTS Status ON

Profile(s) Summer and Winter
Duration(s) (mins) 15, 30, 60, 120, 240, 360, 480, 960, 1440
Return Period(s) (years) 2, 30, 100
Climate Change (%) 0, 0, 0

PN	US/MH Name	Storm	Return Period	Climate Change	First (X) Surcharge	First (Y) Flood	First (Z) Overflow	Overflow Act.	Water Level (m)
1.000	1	15 Winter	30	+0%	2/15 Summer	30/15 Summer			20.001
1.001	2	15 Summer	30	+0%	2/15 Summer				19.449

PN	US/MH Name	Surcharged Depth (m)	Flooded Volume (m³)	Flow / Cap.	Overflow (l/s)	Pipe Flow (l/s)	Status	Level Exceeded
1.000	1	0.851	0.882	2.11		37.3	FLOOD	6
1.001	2	0.424	0.000	2.11		37.3	SURCHARGED	

©1982-2018 Innovyze

100 year Return Period Summary of Critical Results by Maximum Level (Rank 1) for Storm

Simulation Criteria

Areal Reduction Factor 1.000 Additional Flow - % of Total Flow 0.000
Hot Start (mins) 0 MADD Factor * 10m³/ha Storage 2.000
Hot Start Level (mm) 0 Inlet Coeffiecient 0.800
Manhole Headloss Coeff (Global) 0.500 Flow per Person per Day (l/per/day) 0.000
Foul Sewage per hectare (l/s) 0.000

Number of Input Hydrographs 0 Number of Storage Structures 0
Number of Online Controls 0 Number of Time/Area Diagrams 0
Number of Offline Controls 0 Number of Real Time Controls 0

Synthetic Rainfall Details

Rainfall Model FEH Data Type Point
FEH Rainfall Version 2013 Cv (Summer) 0.750
Site Location GB 507331 105104 Cv (Winter) 0.840

Margin for Flood Risk Warning (mm) 0.0 DVD Status OFF
Analysis Timestep Fine Inertia Status OFF
DTS Status ON

Profile(s) Summer and Winter
Duration(s) (mins) 15, 30, 60, 120, 240, 360, 480, 960, 1440
Return Period(s) (years) 2, 30, 100
Climate Change (%) 0, 0, 0

PN	US/MH Name	Storm	Return Period	Climate Change	First (X) Surcharge	First (Y) Flood	First (Z) Overflow	Overflow Act.	Water Level (m)
1.000	1	15 Winter	100	+0%	2/15 Summer	30/15 Summer			20.004
1.001	2	30 Summer	100	+0%	2/15 Summer				19.452

PN	US/MH Name	Surcharged Depth (m)	Flooded Volume (m³)	Flow / Cap.	Overflow (l/s)	Pipe Flow (l/s)	Status	Level Exceeded
1.000	1	0.854	4.250	2.11		37.3	FLOOD	6
1.001	2	0.427	0.000	2.11		37.3	SURCHARGED	

©1982-2018 Innovyze

Time Area Diagram for Storm

Time (mins)	Area (ha)	Time (mins)	Area (ha)	Time (mins)	Area (ha)
0-4	0.000	4-8	0.349	8-12	0.120

Total Area Contributing (ha) = 0.469

Total Pipe Volume (m^3) = 13.087

©1982-2018 Innovyze

STORM SEWER DESIGN by the Modified Rational Method

Network Design Table for Storm

« - Indicates pipe capacity < flow

PN	Length (m)	Fall (m)	Slope (1:X)	I.Area (ha)	T.E. (mins)	Base Flow (l/s)	k (mm)	HYD SECT	DIA (mm)	Section Type	Auto Design
1.000	6.898	0.246	28.0	0.014	2.00	0.0	0.600	o	150	Pipe/Conduit	
1.001	8.564	0.145	59.2	0.030	0.00	0.0	0.600	o	150	Pipe/Conduit	
1.002	19.995	0.549	36.4	0.028	0.00	0.0	0.600	o	225	Pipe/Conduit	
2.000	18.002	0.100	180.0	0.013	2.00	0.0	0.600	o	225	Pipe/Conduit	
1.003	17.157	0.043	400.0	0.013	0.00	0.0	0.600	o	300	Pipe/Conduit	

Network Results Table

PN	Rain (mm/hr)	T.C. (mins)	US/IL (m)	Σ I.Area (ha)	Σ Base Flow (l/s)	Foul (l/s)	Add Flow (l/s)	Vel (m/s)	Cap (l/s)	Flow (l/s)
1.000	50.00	2.06	20.700	0.014	0.0	0.0	0.0	1.91	33.8	1.9
1.001	50.00	2.17	20.445	0.044	0.0	0.0	0.0	1.31	23.1	5.9
1.002	50.00	2.32	20.300	0.071	0.0	0.0	0.0	2.17	86.5	9.7
2.000	50.00	2.31	19.800	0.013	0.0	0.0	0.0	0.97	38.6	1.8
1.003	50.00	2.69	19.700	0.098	0.0	0.0	0.0	0.78	55.1	13.3

©1982-2018 Innovyze

STORM SEWER DESIGN by the Modified Rational Method

Network Design Table for Storm

PN	Length (m)	Fall (m)	Slope (1:X)	I.Area (ha)	T.E. (mins)	Base Flow (l/s)	k (mm)	HYD SECT	DIA (mm)	Section Type	Auto Design
1.004	22.272	0.056	400.0	0.014	0.00	0.0	0.600	o	300	Pipe/Conduit	
1.005	12.374	0.031	400.0	0.013	0.00	0.0	0.600	o	300	Pipe/Conduit	
3.000	26.255	0.088	300.0	0.014	2.00	0.0	0.600	o	300	Pipe/Conduit	
1.006	7.052	0.018	400.0	0.000	0.00	0.0	0.600	o	300	Pipe/Conduit	
1.007	8.074	0.020	400.0	0.207	0.00	0.0	0.600	o	300	Pipe/Conduit	
1.008	29.355	0.652	45.0	0.000	0.00	0.0	0.600	o	300	Pipe/Conduit	

Network Results Table

PN	Rain (mm/hr)	T.C. (mins)	US/IL (m)	Σ I.Area (ha)	Σ Base Flow (l/s)	Foul (l/s)	Add Flow (l/s)	Vel (m/s)	Cap (l/s)	Flow (l/s)
1.004	50.00	3.16	19.657	0.112	0.0	0.0	0.0	0.78	55.1	15.2
1.005	50.00	3.43	19.601	0.126	0.0	0.0	0.0	0.78	55.1	17.0
3.000	50.00	2.48	19.550	0.014	0.0	0.0	0.0	0.30	63.8	1.9
1.006	50.00	3.58	19.462	0.140	0.0	0.0	0.0	0.78	55.1	18.9
1.007	50.00	3.75	19.444	0.346	0.0	0.0	0.0	0.78	55.1	46.9
1.008	50.00	3.96	19.395	0.346	0.0	0.0	0.0	2.35	166.1	46.9

©1982-2018 Innovyze

STORM SEWER DESIGN by the Modified Rational Method

Network Design Table for Storm

PN	Length (m)	Fall (m)	Slope (1:X)	I.Area (ha)	T.E. (mins)	Base Flow (l/s)	k (mm)	HYD SECT	DIA (mm)	Section Type	Auto Design
4.000	25.429	0.254	100.0	0.022	2.00	0.0	0.600	o	150	Pipe/Conduit	
4.001	9.579	0.048	200.0	0.024	0.00	0.0	0.600	o	150	Pipe/Conduit	
4.002	10.083	0.202	50.0	0.024	0.00	0.0	0.600	o	225	Pipe/Conduit	
4.003	12.794	0.320	40.0	0.016	0.00	0.0	0.600	o	300	Pipe/Conduit	
1.009	40.573	0.010	4000.0	0.035	0.00	0.0	0.600	o	150	Pipe/Conduit	

Network Results Table

PN	Rain (mm/hr)	T.C. (mins)	US/IL (m)	Σ I.Area (ha)	Σ Base Flow (l/s)	Foul (l/s)	Add Flow (l/s)	Vel (m/s)	Cap (l/s)	Flow (l/s)
4.000	50.00	2.42	19.450	0.022	0.0	0.0	0.0	1.00	17.8	3.0
4.001	50.00	2.65	19.196	0.046	0.0	0.0	0.0	0.71	12.5	6.3
4.002	50.00	2.74	19.148	0.071	0.0	0.0	0.0	1.85	73.7	9.6
4.003	50.00	2.82	18.946	0.087	0.0	0.0	0.0	2.49	176.2	11.8
1.009	40.73	8.46	18.610	0.469	0.0	0.0	0.0	0.15	2.76	51.7

©1982-2018 Innovyze

Area Summary for Storm

Pipe Number	PIMP Type	PIMP Name	PIMP (%)	Gross Area (ha)	Imp. Area (ha)	Pipe Total (ha)
1.000	User	-	100	0.014	0.014	0.014
1.001	User	-	100	0.015	0.015	0.015
	User	-	100	0.015	0.015	0.030
1.002	User	-	100	0.014	0.014	0.014
	User	-	100	0.013	0.013	0.028
2.000	User	-	100	0.013	0.013	0.013
1.003	User	-	100	0.013	0.013	0.013
1.004	User	-	100	0.014	0.014	0.014
1.005	User	-	100	0.013	0.013	0.013
3.000	User	-	100	0.014	0.014	0.014
1.006	-	-	100	0.000	0.000	0.000
1.007	User	-	100	0.015	0.015	0.015
	User	-	100	0.192	0.192	0.207
1.008	-	-	100	0.000	0.000	0.000
4.000	User	-	100	0.022	0.022	0.022
4.001	User	-	100	0.024	0.024	0.024
4.002	User	-	100	0.024	0.024	0.024
4.003	User	-	100	0.016	0.016	0.016
1.009	User	-	100	0.015	0.015	0.015
	User	-	100	0.020	0.020	0.035
				Total	Total	Total
				0.469	0.469	0.469

©1982-2018 Innovyze

Free Flowing Outfall Details for Storm

Outfall Pipe Number	Outfall Name	C. Level (m)	I. Level (m)	Min I. Level (m)	D,L (mm)	W (mm)
1.009		19.500	18.600	0.000	0	0

©1982-2018 Innovyze

Online Controls for Storm

Orifice Manhole: PP, DS/PN: 1.007, Volume (m³): 0.8

Diameter (m) 0.042 Discharge Coefficient 0.600 Invert Level (m) 19.444

Complex Manhole: PP & GT, DS/PN: 1.009, Volume (m³): 3.2

Hydro-Brake® Optimum

Unit Reference	MD-SHE-0069-2000-0900-2000	Sump Available	Yes
Design Head (m)	0.900	Diameter (mm)	69
Design Flow (l/s)	2.0	Invert Level (m)	18.610
Flush-Flo™	Calculated	Minimum Outlet Pipe Diameter (mm)	100
Objective	Minimise upstream storage	Suggested Manhole Diameter (mm)	1200
Application	Surface		

Control Points	Head (m)	Flow (l/s)	Control Points	Head (m)	Flow (l/s)
Design Point (Calculated)	0.900	2.0	Kick-Flo®	0.568	1.6
Flush-Flo™	0.278	2.0	Mean Flow over Head Range	-	1.8

The hydrological calculations have been based on the Head/Discharge relationship for the Hydro-Brake® Optimum as specified. Should another type of control device other than a Hydro-Brake Optimum® be utilised then these storage routing calculations will be invalidated

©1982-2018 Innovyze

Hydro-Brake® Optimum

Depth (m)	Flow (l/s)	Depth (m)	Flow (l/s)	Depth (m)	Flow (l/s)	Depth (m)	Flow (l/s)	Depth (m)	Flow (l/s)	Depth (m)	Flow (l/s)
0.100	1.7	0.600	1.7	1.600	2.6	2.600	3.2	5.000	4.4	7.500	5.3
0.200	2.0	0.800	1.9	1.800	2.7	3.000	3.5	5.500	4.6	8.000	5.5
0.300	2.0	1.000	2.1	2.000	2.9	3.500	3.7	6.000	4.8	8.500	5.7
0.400	1.9	1.200	2.3	2.200	3.0	4.000	4.0	6.500	5.0	9.000	5.8
0.500	1.8	1.400	2.4	2.400	3.1	4.500	4.2	7.000	5.2	9.500	6.0

Orifice

Diameter (m) 0.070 Discharge Coefficient 0.600 Invert Level (m) 19.610

©1982-2018 Innovyze

Storage Structures for Storm

Cellular Storage Manhole: GT, DS/PN: 3.000

Invert Level (m) 19.550 Infiltration Coefficient Side (m/hr) 0.00000 Porosity 0.95
Infiltration Coefficient Base (m/hr) 0.00000 Safety Factor 2.0

Depth (m)	Area (m²)	Inf. Area (m²)	Depth (m)	Area (m²)	Inf. Area (m²)	Depth (m)	Area (m²)	Inf. Area (m²)
0.000	110.5	0.0	0.800	110.5	0.0	0.801	0.0	0.0

Porous Car Park Manhole: PP, DS/PN: 1.007

Infiltration Coefficient Base (m/hr) 0.00000 Porosity 0.30 Slope (1:X) 0.0
Membrane Percolation (mm/hr) 1000 Invert Level (m) 19.850 Depression Storage (mm) 5
Max Percolation (l/s) 225.6 Width (m) 29.0 Evaporation (mm/day) 3
Safety Factor 2.0 Length (m) 28.0 Cap Volume Depth (m) 0.500

Complex Manhole: PP & GT, DS/PN: 1.009

Cellular Storage

Invert Level (m) 18.610 Infiltration Coefficient Side (m/hr) 0.00000 Porosity 0.95
Infiltration Coefficient Base (m/hr) 0.00000 Safety Factor 2.0

©1982-2018 Innovyze

Cellular Storage

Depth (m)	Area (m²)	Inf. Area (m²)	Depth (m)	Area (m²)	Inf. Area (m²)	Depth (m)	Area (m²)	Inf. Area (m²)
0.000	185.0	0.0	0.400	185.0	0.0	0.401	0.0	0.0

Porous Car Park

Infiltration Coefficient Base (m/hr)	0.00000	Porosity	0.30	Slope (1:X)	0.0
Membrane Percolation (mm/hr)	1000	Invert Level (m)	19.010	Depression Storage (mm)	5
Max Percolation (l/s)	27.8	Width (m)	10.0	Evaporation (mm/day)	3
Safety Factor	2.0	Length (m)	10.0	Cap Volume Depth (m)	0.750

©1982-2018 Innovyze

2 year Return Period Summary of Critical Results by Maximum Level (Rank 1) for Storm

Simulation Criteria

Areal Reduction Factor 1.000 Manhole Headloss Coeff (Global) 0.500 MADD Factor * 10m³/ha Storage 2.000
Hot Start (mins) 0 Foul Sewage per hectare (l/s) 0.000 Inlet Coeffiecient 0.800
Hot Start Level (mm) 0 Additional Flow - % of Total Flow 0.000 Flow per Person per Day (l/per/day) 0.000

Number of Input Hydrographs 0 Number of Offline Controls 0 Number of Time/Area Diagrams 0
Number of Online Controls 2 Number of Storage Structures 3 Number of Real Time Controls 0

Synthetic Rainfall Details

Rainfall Model FEH Site Location GB 507331 105104 Cv (Summer) 0.750
FEH Rainfall Version 2013 Data Type Point Cv (Winter) 0.840

Margin for Flood Risk Warning (mm) 0.0 DVD Status ON
Analysis Timestep 2.5 Second Increment (Extended) Inertia Status ON
DTS Status ON

Profile(s) Summer and Winter
Duration(s) (mins) 15, 30, 60, 120, 240, 360, 480, 960, 1440
Return Period(s) (years) 2, 30, 100
Climate Change (%) 40, 40, 40

PN	US/MH Name	Event	Duration (mins)	Storm Rank	US/CL (m)	Water Level (m)	Surcharged Depth (m)	Flow / Cap.	Maximum Vol (m³)	Discharge Vol (m³)	Pipe Flow (l/s)	Status
1.000	1	15 minute 2 year Summer I+40%	15	1	21.500	20.739	-0.111	0.16	0.010	1.397	4.5	OK
1.001	2	15 minute 2 year Summer I+40%	15	1	21.250	20.520	-0.075	0.49	0.028	4.439	10.0	OK

©1982-2018 Innovyze

2 year Return Period Summary of Critical Results by Maximum Level (Rank 1) for Storm

PN	US/MH Name	Event	Duration (mins)	Storm Rank	US/CL (m)	Water Level (m)	Surcharged Depth (m)	Flow / Cap.	Maximum Vol (m³)	Discharge Vol (m³)	Pipe Flow (l/s)	Status
1.002	3	15 minute 2 year Summer I+40%	15	1	21.100	20.368	-0.157	0.19	0.037	7.271	15.3	OK
2.000	4	15 minute 2 year Winter I+40%	15	1	20.600	19.982	-0.043	0.11	0.050	1.510	3.7	OK
1.003	5	15 minute 2 year Winter I+40%	15	1	20.500	19.979	-0.021	0.40	0.871	11.011	17.5	OK
1.004	6	360 minute 2 year Winter I+40%	360	1	20.500	19.958	0.001	0.09	1.167	39.284	4.5	SURCHARGED
1.005	7	360 minute 2 year Winter I+40%	360	1	20.500	19.957	0.056	0.13	1.587	43.312	5.0	SURCHARGED
3.000	GT	360 minute 2 year Winter I+40%	360	1	21.100	19.956	0.106	0.04	42.704	-16.187	2.5	SURCHARGED
1.006	8	360 minute 2 year Winter I+40%	360	1	20.500	19.956	0.194	0.07	2.777	25.044	2.8	SURCHARGED
1.007	PP	360 minute 2 year Winter I+40%	360	1	20.500	19.955	0.211	0.07	26.222	91.875	2.6	SURCHARGED
1.008	9	360 minute 2 year Winter I+40%	360	1	20.300	19.419	-0.276	0.02	0.014	91.829	2.6	OK
4.000	10	15 minute 2 year Summer I+40%	15	1	20.250	19.519	-0.081	0.43	0.018	2.276	7.2	OK
4.001	11	15 minute 2 year Summer I+40%	15	1	20.000	19.332	-0.014	1.00	0.141	4.732	11.1	OK
4.002	12	1440 minute 2 year Winter I+40%	1440	1	20.000	19.330	-0.043	0.02	0.191	35.676	1.0	OK
4.003	13	1440 minute 2 year Winter I+40%	1440	1	19.750	19.330	0.084	0.01	0.471	43.982	1.3	SURCHARGED
1.009	PP & GT	1440 minute 2 year Winter I+40%	1440	1	19.750	19.331	0.571	0.38	82.387	229.341	2.0	SURCHARGED

©1982-2018 Innovyze

30 year Return Period Summary of Critical Results by Maximum Level (Rank 1) for Storm

Simulation Criteria

Areal Reduction Factor 1.000 Manhole Headloss Coeff (Global) 0.500 MADD Factor * 10m³/ha Storage 2.000
Hot Start (mins) 0 Foul Sewage per hectare (l/s) 0.000 Inlet Coeffiecient 0.800
Hot Start Level (mm) 0 Additional Flow - % of Total Flow 0.000 Flow per Person per Day (l/per/day) 0.000

Number of Input Hydrographs 0 Number of Offline Controls 0 Number of Time/Area Diagrams 0
Number of Online Controls 2 Number of Storage Structures 3 Number of Real Time Controls 0

Synthetic Rainfall Details

Rainfall Model FEH Site Location GB 507331 105104 Cv (Summer) 0.750
FEH Rainfall Version 2013 Data Type Point Cv (Winter) 0.840

Margin for Flood Risk Warning (mm) 0.0 DVD Status ON
Analysis Timestep 2.5 Second Increment (Extended) Inertia Status ON
DTS Status ON

Profile(s) Summer and Winter
Duration(s) (mins) 15, 30, 60, 120, 240, 360, 480, 960, 1440
Return Period(s) (years) 2, 30, 100
Climate Change (%) 40, 40, 40

PN	US/MH Name	Event	Duration (mins)	Storm Rank	US/CL (m)	Water Level (m)	Surcharged Depth (m)	Flow / Cap.	Maximum Vol (m³)	Discharge Vol (m³)	Pipe Flow (l/s)	Status
1.000	1	15 minute 30 year Summer I+40%	15	1	21.500	20.760	-0.090	0.34	0.016	3.046	9.8	OK
1.001	2	15 minute 30 year Summer I+40%	15	1	21.250	20.699	0.104	1.28	0.144	9.676	25.9	SURCHARGED

©1982-2018 Innovyze

30 year Return Period Summary of Critical Results by Maximum Level (Rank 1) for Storm

PN	US/MH Name	Event	Duration (mins)	Storm Rank	US/CL (m)	Water Level (m)	Surcharged Depth (m)	Flow / Cap.	Maximum Vol (m³)	Discharge Vol (m³)	Pipe Flow (l/s)	Status
1.002	3	15 minute 30 year Summer I+40%	15	1	21.100	20.418	-0.107	0.54	0.073	15.847	42.0	OK
2.000	4	360 minute 30 year Winter I+40%	360	1	20.600	20.207	0.182	0.03	0.114	8.243	1.0	SURCHARGED
1.003	5	360 minute 30 year Winter I+40%	360	1	20.500	20.207	0.207	0.17	1.309	60.782	7.2	SURCHARGED
1.004	6	360 minute 30 year Winter I+40%	360	1	20.500	20.206	0.249	0.17	1.324	68.532	8.2	SURCHARGED
1.005	7	360 minute 30 year Winter I+40%	360	1	20.500	20.204	0.303	0.23	1.701	75.163	9.1	SURCHARGED
3.000	GT	360 minute 30 year Winter I+40%	360	1	21.100	20.204	0.354	0.01	68.802	-44.515	0.9	SURCHARGED
1.006	8	360 minute 30 year Winter I+40%	360	1	20.500	20.204	0.442	0.09	2.854	27.808	3.4	SURCHARGED
1.007	PP	360 minute 30 year Winter I+40%	360	1	20.500	20.203	0.459	0.09	86.678	101.123	3.1	SURCHARGED
1.008	9	1440 minute 30 year Winter I+40%	1440	1	20.300	19.690	-0.005	0.02	0.516	288.631	2.8	OK
4.000	10	15 minute 30 year Summer I+40%	15	1	20.250	19.785	0.185	0.82	0.093	4.959	13.9	SURCHARGED
4.001	11	1440 minute 30 year Winter I+40%	1440	1	20.000	19.691	0.345	0.10	0.577	39.272	1.1	SURCHARGED
4.002	12	1440 minute 30 year Winter I+40%	1440	1	20.000	19.689	0.316	0.03	0.310	59.688	1.7	SURCHARGED
4.003	13	1440 minute 30 year Winter I+40%	1440	1	19.750	19.688	0.442	0.02	0.586	73.593	2.2	SURCHARGED
1.009	PP & GT	1440 minute 30 year Winter I+40%	1440	1	19.750	19.687	0.927	0.71	93.864	345.746	3.8	SURCHARGED

©1982-2018 Innovyze

100 year Return Period Summary of Critical Results by Maximum Level (Rank 1) for Storm

Simulation Criteria

Areal Reduction Factor 1.000 Manhole Headloss Coeff (Global) 0.500 MADD Factor * 10m³/ha Storage 2.000
Hot Start (mins) 0 Foul Sewage per hectare (l/s) 0.000 Inlet Coeffiecient 0.800
Hot Start Level (mm) 0 Additional Flow - % of Total Flow 0.000 Flow per Person per Day (l/per/day) 0.000

Number of Input Hydrographs 0 Number of Offline Controls 0 Number of Time/Area Diagrams 0
Number of Online Controls 2 Number of Storage Structures 3 Number of Real Time Controls 0

Synthetic Rainfall Details

Rainfall Model FEH Site Location GB 507331 105104 Cv (Summer) 0.750
FEH Rainfall Version 2013 Data Type Point Cv (Winter) 0.840

Margin for Flood Risk Warning (mm) 0.0 DVD Status ON
Analysis Timestep 2.5 Second Increment (Extended) Inertia Status ON
DTS Status ON

Profile(s) Summer and Winter
Duration(s) (mins) 15, 30, 60, 120, 240, 360, 480, 960, 1440
Return Period(s) (years) 2, 30, 100
Climate Change (%) 40, 40, 40

PN	US/MH Name	Event	Duration (mins)	Storm Rank	US/CL (m)	Water Level (m)	Surcharged Depth (m)	Flow / Cap.	Maximum Vol (m³)	Discharge Vol (m³)	Pipe Flow (l/s)	Status
1.000	1	15 minute 100 year Summer I+40%	15	1	21.500	20.877	0.027	0.40	0.049	3.855	11.4	SURCHARGED
1.001	2	15 minute 100 year Summer I+40%	15	1	21.250	20.835	0.240	1.52	0.218	12.248	30.9	SURCHARGED

©1982-2018 Innovyze

100 year Return Period Summary of Critical Results by Maximum Level (Rank 1) for Storm

PN	US/MH Name	Event	Duration (mins)	Storm Rank	US/CL (m)	Water Level (m)	Surcharged Depth (m)	Flow / Cap.	Maximum Vol (m³)	Discharge Vol (m³)	Pipe Flow (l/s)	Status
1.002	3	15 minute 100 year Winter I+40%	15	1	21.100	20.534	0.009	0.62	0.186	22.465	48.5	SURCHARGED
2.000	4	480 minute 100 year Winter I+40%	480	1	20.600	20.347	0.322	0.03	0.153	10.785	0.9	SURCHARGED
1.003	5	480 minute 100 year Winter I+40%	480	1	20.500	20.347	0.347	0.16	1.535	79.723	7.0	SURCHARGED
1.004	6	480 minute 100 year Winter I+40%	480	1	20.500	20.347	0.390	0.16	1.364	90.242	8.0	SURCHARGED
1.005	7	480 minute 100 year Winter I+40%	480	1	20.500	20.345	0.444	0.23	1.741	99.357	8.9	SURCHARGED
3.000	GT	480 minute 100 year Winter I+40%	480	1	21.100	20.344	0.494	0.02	83.590	-49.100	1.0	SURCHARGED
1.006	8	480 minute 100 year Winter I+40%	480	1	20.500	20.344	0.582	0.08	2.894	47.408	3.3	SURCHARGED
1.007	PP	480 minute 100 year Winter I+40%	480	1	20.500	20.344	0.600	0.09	120.953	143.989	3.2	SURCHARGED
1.008	9	960 minute 100 year Winter I+40%	960	1	20.300	19.748	0.053	0.02	0.588	260.150	3.0	SURCHARGED
4.000	10	15 minute 100 year Summer I+40%	15	1	20.250	20.050	0.450	0.96	0.168	6.278	16.3	SURCHARGED
4.001	11	15 minute 100 year Summer I+40%	15	1	20.000	19.756	0.410	3.06	0.596	13.051	33.9	SURCHARGED
4.002	12	960 minute 100 year Winter I+40%	960	1	20.000	19.749	0.376	0.05	0.327	66.006	3.0	SURCHARGED
4.003	13	960 minute 100 year Winter I+40%	960	1	19.750	19.747	0.501	0.03	0.602	80.861	3.6	SURCHARGED
1.009	PP & GT	960 minute 100 year Winter I+40%	960	1	19.750	19.745	0.985	1.01	95.619	284.020	5.4	SURCHARGED

©1982-2018 Innovyze