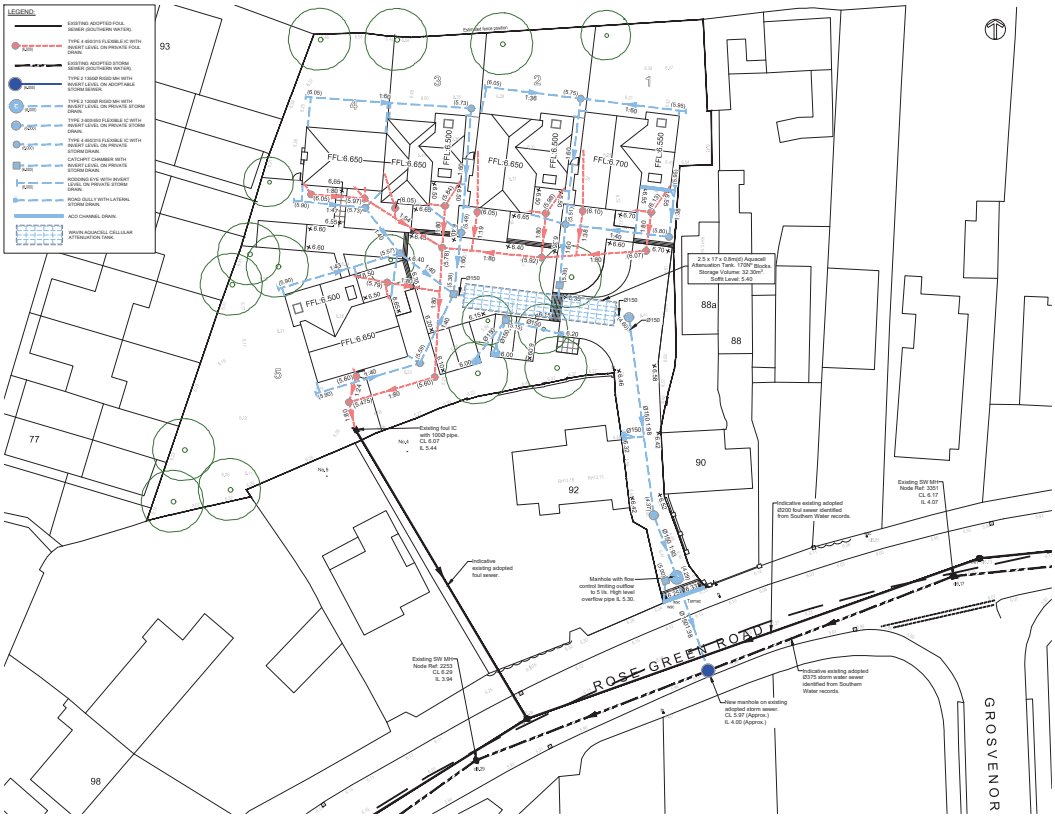

STANDARD NOTES:

1. This drawing is to be read in conjunction with all other OPUS drawings, and with all relevant Architect's and Engineer's drawings and specifications.
2. No dimensions are to be scaled from this drawing. Unless noted otherwise all dimensions are in millimeters and all levels are in metres from site datum. All dimensions to be checked on site. All details and dimensions relating to sub-Contractors work must be checked and agreed between the sub-Contractor or supplier and the general Contractor.
3. The electronic information from this drawing cannot be guaranteed as dimensionally drawn exact. Figured dimensions must be used for setting out and detailing. OPUS logos and company information must be removed from copies if information is re-used.*
4. The main Contractor is responsible for the design of all temporary works, and is also responsible for the safe maintenance and stability of existing buildings at all times.
5. The main Contractor is responsible for the mitigation of all occurrences of ground water during the construction period.
6. Any information given regarding existing underground services is given in good faith after reasonable enquiry of the relevant authorities and owners via our standard enquiry. The main Contractor is responsible for checking all information on site prior to work commencing and taking due care and attention while undertaking the works.
7. The contractor must comply with all current legislation relating to Health & Safety.

DRAINAGE NOTES:

1. All works to be conducted in strict accordance with specification of the Local Authority, BS8301 :1985 & BSEN.752-1.
2. All pipe runs near buildings to comply with the Building Regulations 2002 Part H1. Where a pipe is within 1m of a foundation the trench shall be filled with class GEN3 concrete up to the underside of the foundation. Where a pipe is within 1m of a foundation, but below foundations, the trench shall be filled with class GEN3 concrete to a level below the lowest level for the foundation equal to the distance from the foundation less 150mm. In both cases the pipe shall be bedded and surrounded in 150mm thick class GEN3 concrete.
3. Where pipes, external to the structure, have a depth to soffit from ground level of less than 400mm they shall have a class GEN3 concrete encasement (150mm thick).
4. Where a pipe, under a carriageway, has a depth of cover of less than 1.2m the pipe shall be laid to a class Z bedding.
5. Where pipes are bedded and surrounded in concrete, flexible joints should be provided. Compressible boards (fibreboard or polystyrene) shall be provided at a maximum of 6m centres in accordance with BS8301 :1985. Compressible boards shall be provided for the full height and width equal to the concrete in cross section. A band of fibreboard of 18mm for pipes up to 450mm nominal diameter and 36mm for pipes over 450mm nominal diameter.
6. All private building drainage shall be constructed in strict accordance with BSEN.752-1.
7. Unless otherwise specified, building drainage to be 100mm internal diameter.
8. Minimum gradient for Ø100mm surface drainage pipes is 1:40, and Ø150mm is 1:100.
9. Minimum gradients for foul drainage pipes:
   Ø100mm: 1:40 where flow is less than 10L or where no WCs are connected.
   Ø100mm: 1:78 where flow is 10L or greater, or where up to 5No. WCs are connected.
   Ø150mm: 1:150 where flow is less than 10L or where no WCs are connected.
   Ø150mm: 1:150 where flow is 10L or greater, or where 5No. or more WCs are connected
10. All gullies not connected to inspection chambers are to be trafidale.
11. All gully connections other than those at manholes to be made via "Y" junctions.
12. Gullies consistent with pedestrian/drive crossings to have pedestrian type gully covers.
13. All road gully connections to be 150mm diameter.
14. All stub stacks to be fitted with an admittance valve where branch drain exceeds 12m except at the head of the run. Soil vent pipes located at the head of a run to be installed with roof tile vent.
15. All connections to be made from soffit to soffit.
16. Trench temporary formwork is required in all excavations exceeding 1.2m depth to provide adequate support and stability at all times.
17. Sewers are to be constructed in single sections between manholes only. Trenches to be backfilled prior to excavating the succeeding sewer run.
18. All concrete and concrete products to be in accordance with BRE 363 for sulphates.
19. Where sewer or drains are to be abandoned they shall be removed or infilled by grouting in accordance with the Civil Engineer Specification for the Water Industry 7th Edition, clause 5.33.

ACO DRAINAGE CHANNELS TO ONLY DRAIN DRIVEWAYS AND PAVEMENTS

CHAMBER COVER LEVELS TO BE INTERPOLATED BETWEEN PROPOSED GROUND LEVELS

PRELIMINARY

-BURIED PRIVATE SERVICES		
Construction Risks	Maintenance/Cleaning Risks	Demolition/Adaption Risks

The table above is provided to assist the Principal Contractor to fulfil his obligations under the Construction (Design & Management) Regulations 2015. It does not include residual risks that a competent Contractor will be aware of nor does it absolve the Principal Contractor of his legal responsibilities.

SAFETY HEALTH AND ENVIRONMENTAL INFORMATION BOX

1:1@ A1
1:2@ A1 0 5 10 20 30 40 50 60 70 80 90 100 mm

BACKGROUND IS BASED ON THE ARCHITECT'S GA DRAWING

ANY DISCREPANCIES OR UNCERTAINTY WITH THE CONTENT OF THIS DRAWING ARE TO BE REPORTED TO THE ENGINEER PRIOR TO CONSTRUCTION.

Revision	Description	Approved	Revision Date
P1	PRELIMINARY ISSUE	APT	08.03.2017
P2	LEVELS REVISED	APT	03.04.2017
P3	EXISTING FW IC REVISED	APT	28.04.2017
P4	S106 APPLICATION ISSUE	APT	10.01.2018
P5	DRAINAGE AMENDED	APT	25.01.2018

OPUS
Fareham Office
+44 1329 822021
Modulus House, Salterns Lane, Fareham Hampshire PO16 0QS

Drawn	Designed	Approved	Revision Date
JPS	JPS	APT	25.01.2018

Project: 90 ROSE GREEN ROAD BOGNOR REGIS

Title: DRAINAGE

Drawing No.	Scale	Existing No.	Sheet No.	Revision
FA E-E1644.00	1:200 AT A1	C300	S01	P5

Original Sheet Size A1 [841x594] Plot Date 25 Jan 2018 @ 10:51 AM Path N:\Projects\EE1600-EE1699\EE1644\04 CAD\Current Working Drawings\FA E-E1644.00 C300 Drainage.dwg C300

TABLE (i)

Diameter of largest pipe in manhole (mm)	Internal diameter of manhole (mm)
Less than 225	1200 (1050 where depth to soffit is 1.35m to 1.5m)
225 - 350	1200
350 - 500	1800
Greater than 900	Consult Undertaker/Engineer's Specification

TABLE (ii)

Pipe Diameter (mm)	Rocker Pipe Length (mm)
150 - 600	600
600 - 750	1000
> 750	1250

ALL PCC RINGS ARE TO BE SPIGOT AND SOCKET BOND CONSTRUCTION.

TABLE (iii)

MH Location	Cover Grade	Test Load
Non-trafficked Pedestrian areas	A15	15
Private drives	B125	125
Parking courts	C250	250
Carriageway	D400	400
Airfields/Dockyards	E600	600
Airfields/Dockyards	F900	900

TABLE (iv)

NRDWA Road Category	Description	Minimum Frame Depth (mm)
I	Trunk roads and dual carriageways	150
II	All other 'A' roads	150
III	Bus Services	150
IV	All other roads except residential cul-de-sacs	150
	Residential cul-de-sacs	100

HIGH STRENGTH TOPPING

1. High-strength concrete topping shall be produced, laid and finished in accordance with the relevant requirements of BS 8110 Part 2 and the following approximate proportions by weight shall be used: 1 part cement, 1 part natural sand and 2 parts single sized coarse aggregate.

RECESSED COVERS

1. Where inspection chamber is located in areas of block paving it shall be fitted with a recessed cover to accommodate paving blocks.

MANHOLE COVERS & FRAMES

1. Manhole cover and frames shall comply with the relevant provisions of BS EN 124, BC 7863 and Highway Agency Guidance Document HA 104/05. They shall be of a non-rocking design which does not rely on the use of cushion inserts.
2. All manhole covers shall be the non-ventilating type and shall have closed keyways.
3. Refer to Table iv for cover grades.

Catchpit Sizing:

Pipe Depth	Catchpit Dia.
<1000mm	900Ø
1000-1350mm	1050Ø
1350-2700mm	1200Ø

PRE-CAST CONCRETE PRODUCTS

1. Products shall comply with the relevant provisions of BS 5911-4:2002.

Minimum Dimensions for Access Fittings and Chambers					
Type	Internal Sizes			Cover Sizes	
	Depth to invert (m)	Length x Width (mm)	Circular (mm)	Length x Width (mm)	Circular (mm)
Rodding Eye	As Drain but Minimum 100mm				
Shallow Access Small	0.6 or less	150x100	150	150x100	150
Large	-	225x100	-	225x100	-
Inspection Chamber	0.6 or less	-	190	-	190
	1.0 or less	450x450	450	450x450	450
Manhole	1.5 or less	1200x750	1050	600x600	600
	Over 1.5	1200x750	1200	600x600	600
Manhole Shaft	Over 2.7	900x840	900	600x600	600

BUILDING REGULATIONS MINIMUM DIMENSIONS FOR MANHOLES

(Not to Scale)

This plan complies with the Building Regulations 2010 Section 'H' - Drainage & Waste Disposal.

LIMITS OF COVER FOR STANDARD STRENGTH RIGID PIPE IN ANY WIDTH OF TRENCH						
		Fields and gardens		Light traffic roads		Heavy traffic roads
PIPE BORE BEDDING CLASS		MIN	MAX	MIN	MAX	MIN	MAX
100mm	D or N	0.4	4.2	0.7	4.1	0.7	3.7
	F	0.3	5.8	0.5	5.8	0.5	5.5
	B	0.3	7.4	0.4	7.4	0.4	7.3
150mm	D or N	0.6	2.7	1.1	3.5	–	–
	F	0.6	3.9	0.7	3.8	0.7	3.5
	B	0.6	5.0	0.6	5.0	0.6	4.6
225mm	D or N	–	–	–	–	–	–
	F	0.6	2.5	1.2	2.1	–	–
	B	0.6	3.3	0.8	3.2	0.9	2.4

PAVIOWORK SPECIFICATIONS

Unless otherwise qualified on the drawings all pipe materials shall be selected as follows:

CLAY (100Ø-1200Ø)
All pipe shall be Class 120 clayware to BS EN 295-1:2013.

UPVC (100Ø-1100Ø)
All pipes shall be to BS EN 1401-1:2009.
All pipes shall be ribbed 'twin wall' to provide a suitable network (pipes & couplers).

CONCRETE (225Ø-3000Ø)
All pipes shall be to BS EN 591-1:2002.

ALL materials shall be BBA certified.

For Public Highway Drainage all materials shall comply with the Specification for Highway Works.

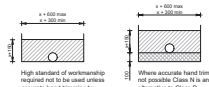

CLASS 'D' PIPE BEDDING

CLASS 'N' PIPE BEDDING

CLASS 'B' PIPE BEDDING

LEGEND:

- Selected fill: free from stones larger than 40mm, lumps of clay over 100mm, timber frozen material and vegetable matter.
- Granular material: should conform to Part H of the Building Regulations 2010 Diagram 10

'x' - Denotes external pipe diameter.

PIPE BEDDING DETAILS (PRIVATE DRAINS)
(Scale 1:20)

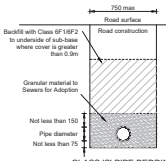

CLASS 'S' PIPE BEDDING
PIPE BEDDING DETAILS
(PRIVATE SEWERS)
(Scale 1:20)

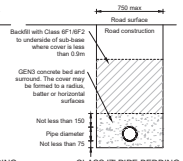

CLASS 'Z' PIPE BEDDING
PIPE BEDDING DETAILS
(PRIVATE SEWERS)
(Scale 1:20)

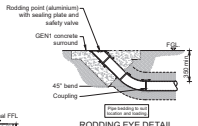

RODDING EYE DETAIL
(Scale 1:20)

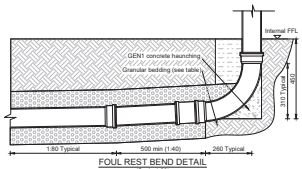

FOUL REST BEND DETAIL
(Scale 1:20)

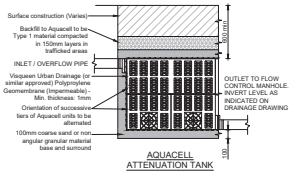

AQUACELL ATTENUATION TANK DETAIL
(Scale 1:20)

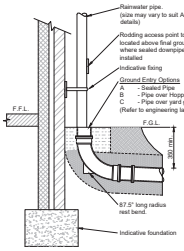

RAINWATER PIPE DETAIL
(Scale 1:20)

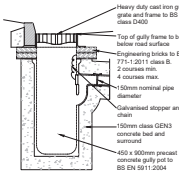

All gullies to be sealed/trapped in accordance with The Environment Agency requirements.

Alternatively a 450Ø x 900 deep plastic trapped road gully may be used surrounded with 150mm concrete. Plastic gullies should be weighted down until concrete surround has set.

TYPICAL ROAD GULLY
(Scale 1:20)

Arched or Installed opening to give 50mm min clearance all around the pipe.

Mask opening both sides with rigid sheet material to prevent overspill of fill or entry for vermin.

Pipe to be laid through foundation at 1:80 slope min to ensure self cleansing velocity is maintained in the unlikely event of settlement.

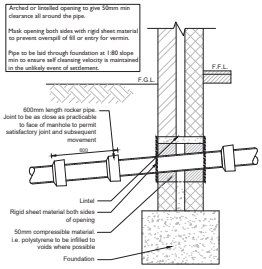

TYPICAL SECTION DETAILING PIPE 'SLEEVE' THROUGH LINTEL OPENING
(Scale 1:20)

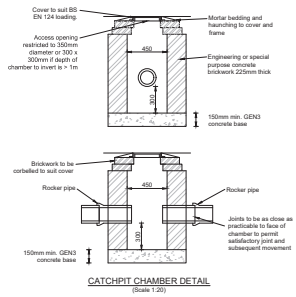

CATCHPIT CHAMBER DETAIL
(Scale 1:20)

STANDARD NOTES:

1. This drawing is to be read in conjunction with all other OPUS drawings, and with all relevant Architect's and Engineer's drawings and specification.
2. No dimensions are to be scaled from this drawing. Unless noted otherwise all dimensions are in millimeters and all levels are in metres from the site datum. All dimensions to be checked on site. All details and dimensions relating to sub-Contractors work must be checked and agreed between the sub-Contractor or supplier and the general Contractor.
3. The electronic information from this drawing cannot be guaranteed as dimensionally drawn exact. Figured dimensions must be used for setting out and detailing. OPUS logos and company information must be removed from copies if information is revised.
4. The main Contractor is responsible for the design of all temporary works, and is also responsible for the safe maintenance and stability of existing buildings at all times.
5. The main Contractor is responsible for the mitigation of all occurrences of ground water during the construction period.
6. Any information given regarding existing underground services is given in good faith after consultation with the relevant authority, however accuracy is not guaranteed. The main Contractor is responsible for locating all services before commencing work and taking due care and attention while undertaking the works.
7. The contractor must comply with all current legislation relating to Health & Safety.

DRAINAGE NOTES:

1. All works to be conducted in strict accordance with specification of the Local Authority, BS8301: 1985 & BSEN 752-1.
2. All pipe runs near buildings to comply with the Building Regulations 2002 Part H1. Where a pipe is within 1m of a foundation the trench shall be filled with class GEN3 concrete up to the lowest level of the foundation. Where the trench is further than 1m from the foundation and where the pipe is laid in granular material, the granular material to the lowest level for the foundation equal to the distance from the foundation less 150mm. In both cases the pipe shall be bedded and surrounded in 150mm thick class GEN3 concrete.
3. Where pipes, external to the structure, have a depth to soffit from ground level of less than 450mm they shall have a class GEN3 concrete encasement (150mm thick).
4. Where a pipe, under a carriageway, has a depth of cover of less than 1.2m the pipe shall be laid in a class 2 bedding.
5. Where pipes are bedded and surrounded in concrete, flexible joints should be provided. Compressible boards (fibreboard or polypropylene) shall be provided at a maximum of 8m centres (concealing each pipe joint). The boards shall be pre-cut to pipe diameter and in a manner that will not reduce the effective pipe bedding and surrounding. Boards to be used for pipes up to 450mm nominal diameter and 18mm for pipes over 450mm nominal diameter.
6. All private building drainage shall be constructed in strict accordance with BSEN 752-1.
7. Unless otherwise specified, building drainage to be 100mm internal diameter.
8. Minimum gradient for Ø100mm surface drainage pipes is 1:40, and Ø150mm is 1:100.
9. Minimum gradients for foul drainage pipes:
   Ø100mm: 1:40 where flow is less than 10L or where no WCs are connected.
   Ø100mm: 1:78 where flow is 10L or greater, or where at less 1No. WC is connected.
   Ø150mm: 1:150 where flow is less than 50L or where up to 5No. WCs are connected.
   Ø150mm: 1:150 where flow is 50L or greater, or where 5No. or more WCs are connected
10. All gullies not connected to inspection chambers are to be rodddable.
11. All gully connections other than those at manholes to be made on 'Y' junctions.
12. Gullies convenient with pedestrian/drive crossings to have pedestrian type gully covers.
13. All road gully connections to be 150mm diameter.
14. All stub stacks to be fitted with air admittance valves where branch drain exceeds 12m except at the head of the run. Soil vent pipes located at the head of a run to be roddded with road rile vent.
15. All connections to be made from soffit to soffit.
16. Trench temporary formwork is required to all excavations exceeding 1.2m depth to provide adequate support and stability at all times.
17. Sewers are to be constructed in single sections between manholes only. Trenches to be backfilled prior to excavating the succeeding sewer run.
18. All concrete and concrete products to be in accordance with BRE 363 for sulphates.
19. Where sewer or drains are to be abandoned they shall be removed or infilled by grouting in accordance with the Civil Engineer Specification for the Water Industry 7th Edition, clause 5.20.

PRELIMINARY

Revision	Description	Approved	Revision Date
P1	PRELIMINARY ISSUE	APT	25.01.2018

OPUS
Fareham Office
+44 1329 822021
Modulus House, Salterns Lane, Fareham Hampshire PO16 0QS

Drawn	Designed	Approved	Revision Date
JPS	JPS	APT	25.01.2018

Project No.	Scale	Drawing No.	Sheet No.	Revision
FA E-E1644.00	AS SHOWN AT A1	C310	SO1	P1

Project: 90 ROSE GREEN ROAD BOGNOR REGIS

Title: CONSTRUCTION DETAILS DRAINAGE

1:1 @ A1
1:2 @ A3
5 10 20 30 40 50 60 70 80 90 100 mm

Original Sheet Size A1 [841x594] Plot Date 25 Jan 2018 @ 11:15 AM Path N:\Projects\EE1650-EE1659\EE1644\04 CAD\Current Working Drawings\FA E-E1644.00 C310 C311 Drainage Details.dwg C310

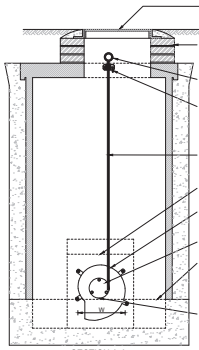

SECTION A-A

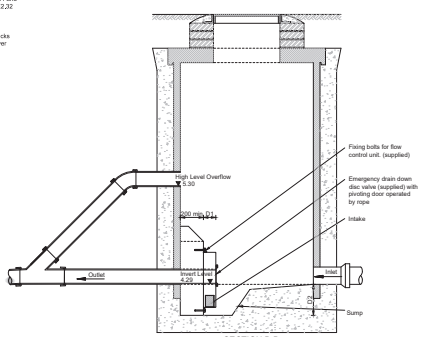

SECTION B-B

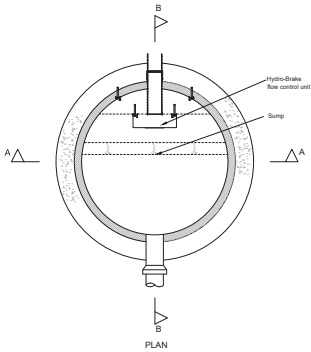

PLAN

Flow Control Notes

1. Safety chains to be used where sewer diameter exceeds 600mm.
2. The centre line of the manhole is not necessarily co-incidental with the centre line of the main pipe run.
3. Sulphate resisting cement and concrete products to be used throughout.
4. Control Chamber:The chamber shall be of suitable size, type and construction. It shall include an emergency drain down pipe in addition to the controlled outlet pipe. A suitable drain valve must be provided to close the drain down pipe.
5. A water tight rodding/access door shall be provided on the upstream end of the flow control unit. This door should be held firmly closed by a minimum of three stainless steel bolts or studs to prevent leakage or accidental opening.

TYPE 2 MANHOLE WITH FLOW CONTROL DEVICE

(Scale 1:20)

The details shown above are indicative only and should not be used as a scaled drawing. Please refer to manufacturers installation.

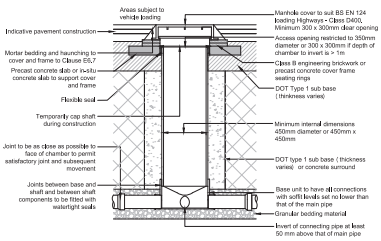

TYPICAL TYPE 3 INSPECTION CHAMBER DETAIL (FLEXIBLE MATERIAL)

(Scale 1:20)

Maximum depth from cover level to soffit of pipe in areas subject to vehicle loading 3m, non entry

(To be read in conjunction with Sewers For Adoption 7th Edition)

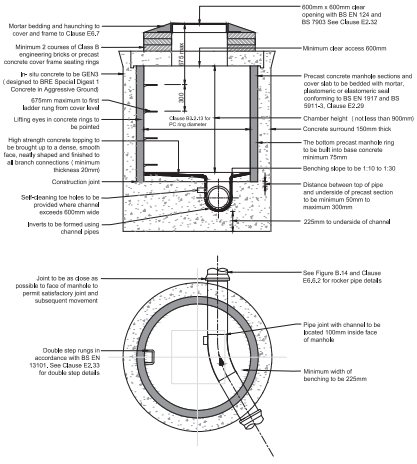

TYPICAL TYPE 2 MANHOLE DETAIL

(Scale 1:20)

Maximum depth from cover level to soffit of pipe 3.0m

(To be read in conjunction with Sewers For Adoption 7th Edition)

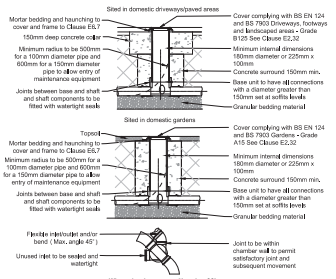

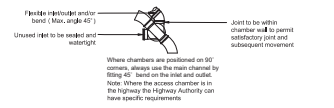

Where chambers are positioned on 90° corners, always use the main channel by fitting 45° bend on the inlet and outlet.

Note: Where the access chamber is in the highway the Highway Authority can have specific requirements

TYPICAL TYPE 4 INSPECTION CHAMBER DETAIL

(Scale 1:20)

Maximum depth from cover level to soffit of pipe 2.0m, non-entry

(To be read in conjunction with Sewers For Adoption 7th Edition)

STANDARD NOTES:

1. This drawing is to be read in conjunction with all other OPUS drawings, and with all relevant Architect's and Engineer's drawings and specification.
2. No dimensions are to be scaled from this drawing. Unless noted otherwise all dimensions are in millimeters and all levels are in meters from the site datum. All dimensions to be checked on site. All details and dimensions relating to sub-Contractors work must be checked and agreed between the sub-Contractor or supplier and the general Contractor.
3. The electronic information from this drawing cannot be guaranteed as dimensionally drawn exact. Figured dimensions must be used for setting out and detailing. OPUS logos and company information must be removed from copies if information is reused.
4. The main Contractor is responsible for the design of all temporary works, and is also responsible for the safe maintenance and stability of existing buildings at all times.
5. The main Contractor is responsible for the mitigation of all occurrences of ground water during the construction period.
6. Any information given regarding existing underground services is given in good faith after consultation with the relevant authority. However accuracy is not guaranteed. The main contractor is responsible for locating all services before commencing work and taking due care and attention while undertaking the works.
7. The contractor must comply with all current legislation relating to Health & Safety.

DRAINAGE NOTES:

1. All works to be conducted in strict accordance with specification of the Local Authority, BS8301: 1985 & BSEN 752-1.
2. All pipe runs near buildings to comply with the Building Regulations 2002 Part H1. Where a pipe is within 1m of a foundation the trench shall be filled with class GEN3 concrete up to the lowest level of the foundation. Where the trench is further than 1m from the foundation and where the pipe is within a zone of influence of the foundation the lowest level for the foundation equal to the distance from the foundation less 100mm. In both cases the pipe shall be bedded and surrounded in 150mm thick class GEN3 concrete.
3. Where pipes, external to the structures, have a depth to soffit from ground level of less than 450mm they shall have a class GEN3 concrete encasement (150mm thick).
4. Where a pipe, under a carriageway, has a depth of cover of less than 1.3m the pipe shall be laid in a class 2 bedding.
5. Where pipes are bedded and surrounded in concrete, flexible joints should be provided. Compressible boards (fibreboard or polypropene) shall be provided at a maximum of 6m centres (coinciding with pipe joints). The boards shall be pre-cut to pipe diameter and in a single piece for pipes up to 450mm nominal diameter and in two equal halves for pipes up to 450mm nominal diameter and three for pipes over 450mm nominal diameter.
6. All private building drainage shall be constructed in strict accordance with BSEN 752-1.
7. Unless otherwise specified, building drainage to be 100mm internal diameter.
8. Minimum gradient for Ø100mm surface drainage pipes is 1:40, and Ø150mm is 1:100.
9. Minimum gradients for foul drainage pipes:
   Ø100mm: 1:40 where flow is less than 10L/s, or where no WCs are connected.
   Ø100mm: 1:50 where flow is 10L or greater, or where at less 1No. WC is connected.
   Ø150mm: 1:100 where flow is less than 30L/s, or where up to 3No. WCs are connected.
   Ø150mm: 1:150 where flow is 30L or greater, or where 3No. or more WCs are connected
10. All gullies not connected to inspection chambers are to be rodddable.
11. All gully connections other than those at manholes to be made as "Y" junctions.
12. Gullies coincident with pedestrian/drive crossings to have pedestrian type gully covers.
13. All road gully connections to be 150mm diameter.
14. All stub stacks to be fitted with air admittance valves where branch drain exceeds 12m except at the head of the run. Soil vent pipes located at the head of a run to be rodddled with road size vent.
15. All connections to be made from soffit to soffit.
16. Trench temporary formwork is required to all excavations exceeding 1.2m depth to provide adequate support and stability at all times.
17. Sewers are to be constructed in single sections between manholes only. Trenches to be backfilled prior to excavating the succeeding sewer run.
18. All concrete and concrete products to be in accordance with BRE 363 for sulphates.
19. Where sewer or drains are to be abandoned they shall be removed or infilled by grouting in accordance with the Civil Engineer Specification for the Water Industry 7th Edition, Clause 5.20.

PRELIMINARY

P1	PRELIMINARY ISSUE	APT	25.01.2018

OPUS
Fareham Office
+44 1329 822021
Modulus House, Salterns Lane, Fareham Hampshire PO16 0QS

Drawn	Designed	Approved	Revision Date
JPS	JPS	APT	25.01.2018

Project No.	Scale	Drawing No.	Sheet No.	Revision
FA E-F2130.00	AS SHOWN AT A1	C311	S02	P1

Project
90 ROSE GREEN ROAD
BOGNOR REGIS

Title
CONSTRUCTION DETAILS
DRAINAGE

1:1 @ A1
1:2 @ A3 0 5 10 20 30 40 50 60 70 80 90 100 mm

Original Sheet Size A1 [841x594] Plot Date 25 Jan 2018 @ 11:15 AM Path N:\Projects\EE1600-EE1699\EE1644\04 CAD\Current Working Drawings\FA E-E1644.00 C310 C311 Drainage Details.dwg C311