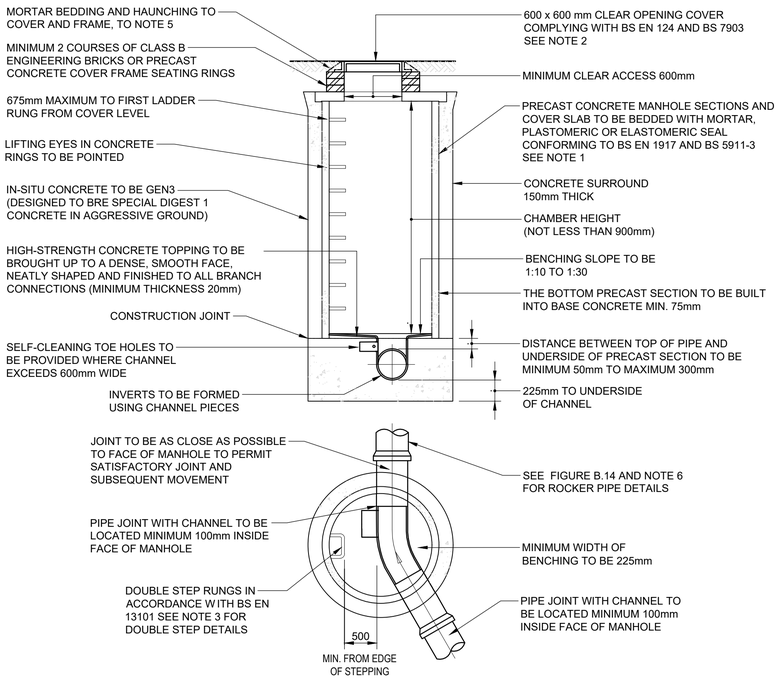

FIGURE B.12
TYPICAL MANHOLE DETAIL - TYPE 2

MAX. DEPTH FROM COVER LEVEL TO SOFFIT OF PIPE 3m

NOT TO SCALE

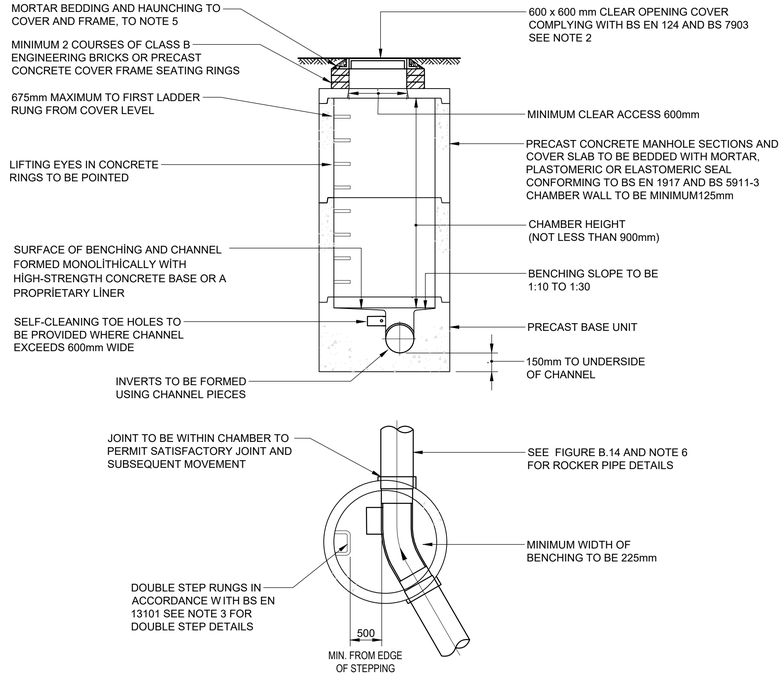

FIGURE B.13
TYPICAL MANHOLE DETAIL - TYPE 2 (Alternative construction detail)

MAX. DEPTH FROM COVER LEVEL TO SOFFIT OF PIPE 3m

NOT TO SCALE

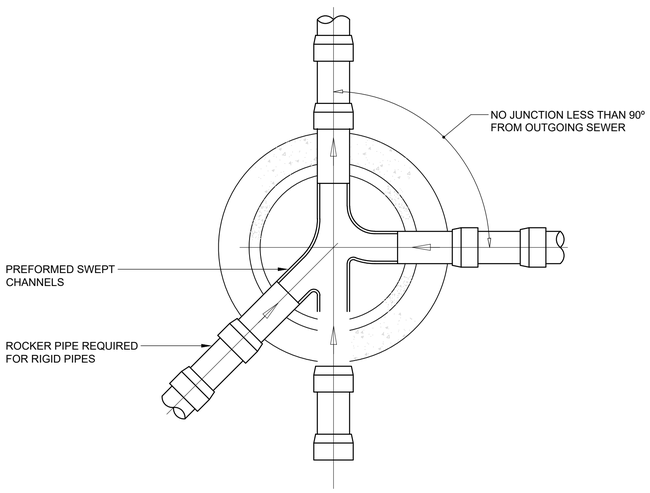

SECTIONAL PLAN

RIGID PIPES BUILT INTO MANHOLE SHOULD HAVE A FLEXIBLE JOINT AS CLOSE AS FEASIBLE TO THE EXTERNAL FACE OF THE STRUCTURE AND THE LENGTH OF THE NEXT ROCKER PIPE SHOULD BE AS SHOWN.

Table C

Nominal diameter (mm)	Maximum effective length (m)
150 - 600	0.6
601 - 750	1.00
over 750	1.25

ALL PIPES ENTERING THE BOTTOM OF THE MANHOLE TO HAVE SOFFITS LEVEL.

FIGURE B.14
TYPICAL ARRANGEMENT OF PIPE JUNCTIONS WITHIN MANHOLES

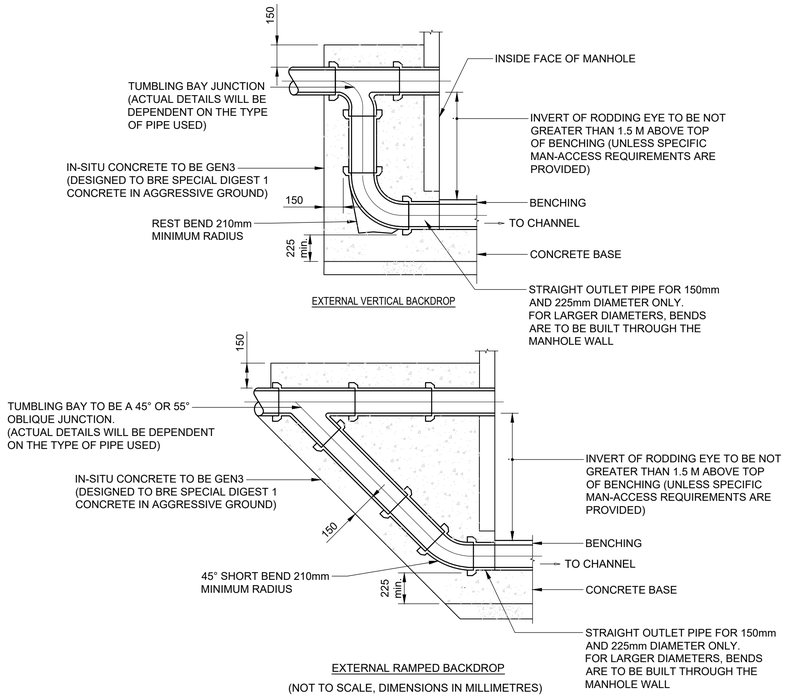

(NOT TO SCALE, DIMENSIONS IN MILLIMETRES)

FIGURE B.15
TYPICAL VERTICAL AND RAMPED BACKDROP DETAIL

NOTE: STEEPER GRADIENTS ARE PREFERRED TO THE USE OF BACKDROPS. TYPE OF BACKDROP TO BE USED TO BE AGREED WITH UNDERTAKER.

© Markides Associates 2020. All rights reserved

Scale 1:50 @ A1 - 1:100 @ A3

1m 0 1m 2m 3m 4m 5m

DO NOT SCALE OFF THIS DRAWING

NOTES

1. THIS DRAWING IS TO BE READ IN CONJUNCTION WITH THE MANUAL FOR CONTRACT DRAWINGS, VOLUME 1, "SEWERS FOR ADOPTION 7TH EDITION - A DESIGN GUIDE FOR DEVELOPERS AND ALL OTHER RELATED DRAWINGS ISSUED.
2. MANHOLE CHANNEL INVERTS TO HAVE A GRADIENT NOT LESS THAN THAT OF THE OUTGOING PIPE.
3. THE CENTRELINE OF THE MANHOLE IS NOT NECESSARILY COINCIDENTAL WITH THE CENTRELINE OF THE MAIN PIPE.
4. POSITION OF MANHOLE COVER SLAB AND STEP RUNGS TO BE DIRECTED ON SITE.
5. WHERE PIPES OF DIFFERENT DIAMETERS ARE BUILT INTO THE MANHOLE, THEY SHOULD BE LAID TO COMMON SOFFIT UNLESS OTHERWISE STATED.
6. MINIMUM GULLY PIPE GRADIENT TO BE 1:80
7. WHERE A SEWER IS 150mmØ ALL CONNECTIONS AT MANHOLES TO BE MADE USING OBLIQUE (45°) CHANNEL JUNCTIONS WITH CHANNEL/CHANNEL ENLARGER BENDS AS NECESSARY.
8. AT SIGNIFICANT CHANGES IN DIRECTION, THE LARGEST PRACTICAL RADIUS OF CHANNEL JUNCTIONS SHALL BE USED.
9. ALL MORTAR TO BE CLASS 1 UNLESS NOTED OTHERWISE.
10. BRICKS TO BE ENGINEERING CLASS B TO BS EN 771-1, LAID IN ENGLISH BOND ON CLASS (i) MORTAR TO CLAUSE 2404, SPECIFICATION FOR HIGHWAY WORKS. ANY OVER EXCAVATION TO BE MADE GOOD.
11. CONNECTIONS TO CARRIER DRAINS TO BE BY MEANS OF 'Y' JUNCTIONS UNLESS OTHERWISE AGREED.
12. ALL DIMENSIONS ARE IN MILLIMETRES UNLESS OTHERWISE STATED.
13. FINISH TO INTERNAL CONCRETE TO BE F1 ON FORMED SURFACES OR U2 ON UNFORMED SURFACES.
14. PERMITTED MATERIAL FOR PIPES ARE SHOWN IN PART E, SEWERS FOR ADOPTION 6th EDITION.
15. ALL CONCRETE AND CONCRETE PRODUCTS TO BE SULPHATE RESISTING.

Revision History

Rev	Comment	By	Chkd	Appr	Date
P01	FOR INFORMATION	AH	BL	DT	27.10.2021

Current Revision

Rev	Comment	By	Chkd	Appr	Date
P01	FOR INFORMATION	AH	BL	DT	27.10.2021

PRELIMINARY

SRC RECYCLING

MARKIDES ASSOCIATES
TRANSPORT PLANNING AND ENGINEERING
3rd Floor
The Bridge
73 - 83 Southwark Bridge Road
London, SE1 0NQ
Telephone: 0207 442 2225
E: enquiries@markidesassociates.co.uk
W: www.markidesassociates.co.uk

Project
SRC RECYCLING

Drawing Title
DRAINAGE DETAILS
SHEET 1 OF 3

Markides Associates reference: 20293 1:50

20293-MA-XX-XX-DR-C-5000 - P01