Plans & Elevations 1:100 @ A1

1 0 1 2 3 4 5 6 7 8 9m

1:100

TYPE C3H4PA/C3H3P - Plots 5-6

plans & elevations

Notes

1. This drawing is the copyright of MH Architects Ltd
2. Do not scale this drawing except for Local Authority planning purposes
3. All dimensions must be checked on site by the contractor prior to commencement of the works.

Client Approval	
X	A - Approved
X	B - Approved with comments
X	C - Do not use

Rev.	Revision Note/Purpose of Issue	Drw By	Date	Chk By	Date

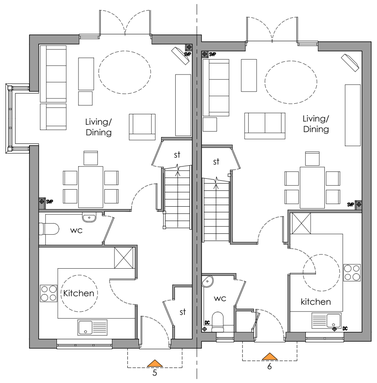

GROUND
floor plan

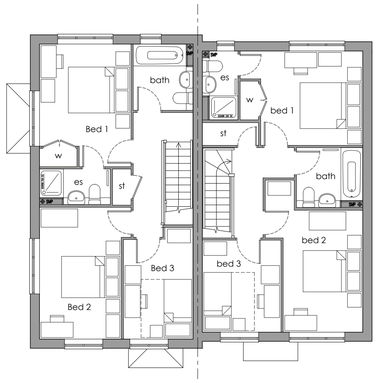

FIRST
floor plan

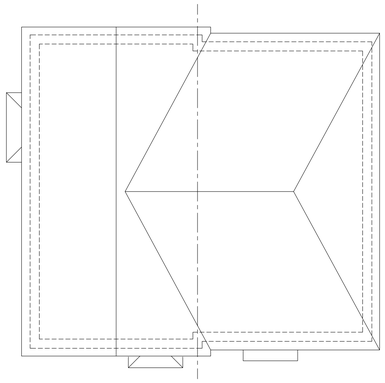

ROOF
plan

FRONT
elevation

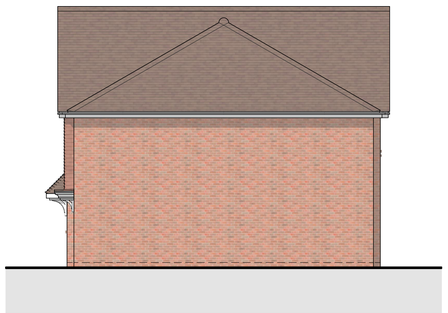

SIDE
elevation

REAR
elevation

SIDE
elevation

Schedule of accommodation		
C3H3P - GIA	94.76	sqm
	1020	sqft

Schedule of accommodation		
C3H4PA - GIA	95.12	sqm
	1024	sqft

Residential Development at Lidsey Road

Woodgate
West Sussex, PO20 3SU
For Thakeham Client on behalf of Southern Housing Group

Drawing title

Proposed Plans & Elevations
Units 5-6

Drawn	Date	Checked	Date	Scale at A1
JL	Mar 20	HJG	Mar 20	1:100

Job No.	Pro.	Org.	Zone	Level	Type	Role	No.	Rev.
19-121	LID	MHA	00	XX	DR	A	0012	00

Purpose of Issue

PLANNING

Ground Floor Bicentennial Building
Southern Gate Chichester
West Sussex PO19 8EZ

t. 01243 774748
e. admin@mharchitects.co.uk
www.mharchitects.co.uk

Limited Company
Registered in England No.1994233

ARUN DISTRICT COUNCIL AL/46/20/PL