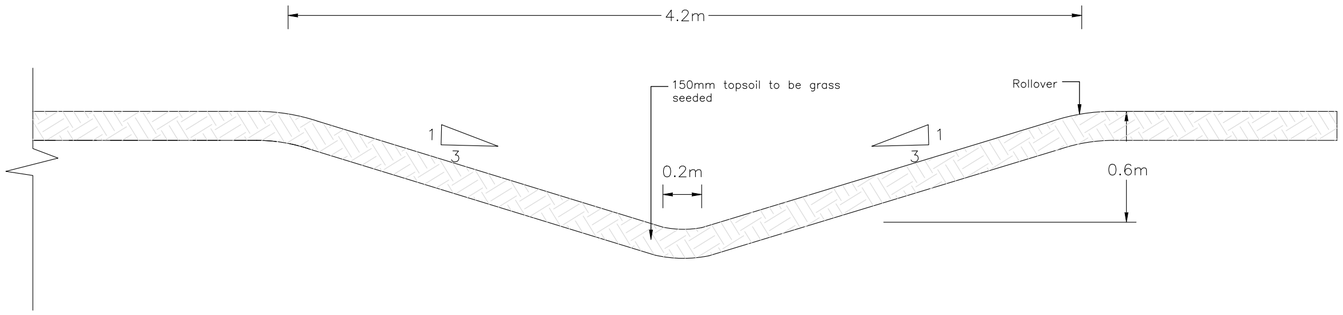

INTERSECTION 1
SWALE 2 DETAIL
Scale 1:20

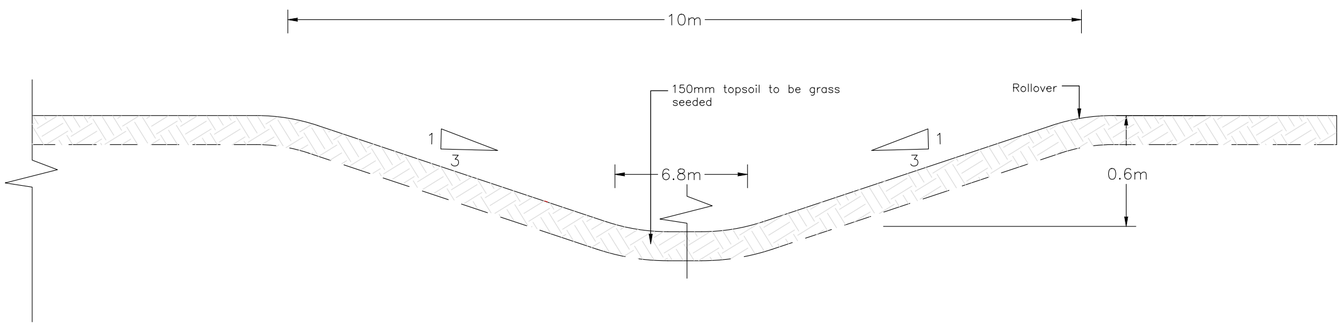

INTERSECTION 2
SWALE 2 DETAIL
Scale 1:20

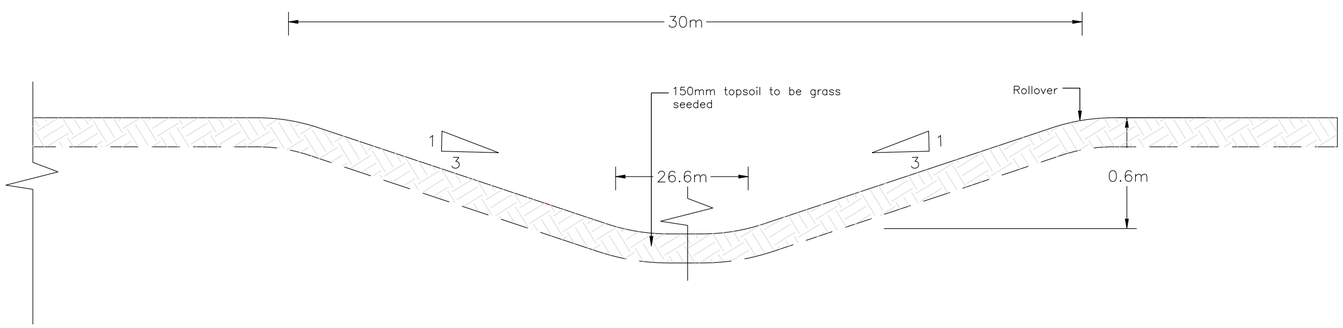

INTERSECTION 3
SWALE 2 DETAIL
Scale 1:20

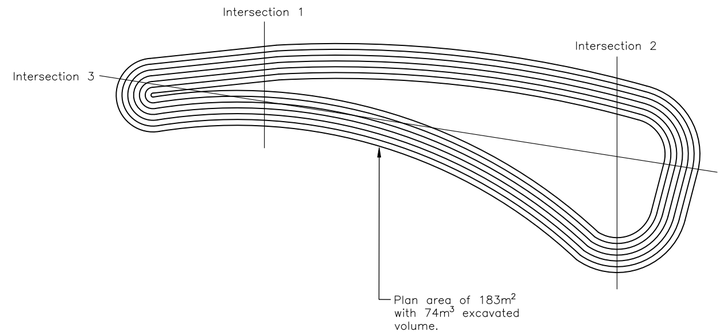

SWALE 2 PLAN DETAIL
Not to scale

REV. No.	DATE	DESCRIPTION	INITIALS
B	15.06.23	Updated to as-built 15.06.23	SS

Client: TaylorWimpey plc

Project: Westergate & Eastergate

Title: Swale 2 Details

MJA CONSULTING
CIVIL AND STRUCTURAL ENGINEERS
Monarch House, Barton Lane,
Abingdon, Oxon, OX14 3NB
Tel: 01235 555173
Fax: 01235 523226

Scale	Date	Drawing No.	Rev
AsShown@A2	Mar'18	5655:71	B
Checked: CP	Drawn: SS		

© This drawing is the copyright of Michael A Jennings Associates Limited and may not be copied, altered or reproduced in any way without their permission.