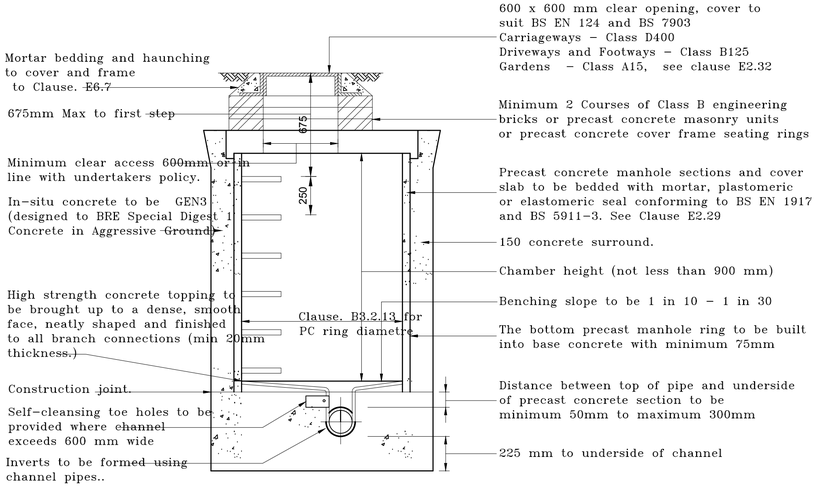

TYPICAL MANHOLE DETAIL–TYPE 2

(MAX DEPTH FROM C.L. TO SOFFIT OF PIPE 3000MM)

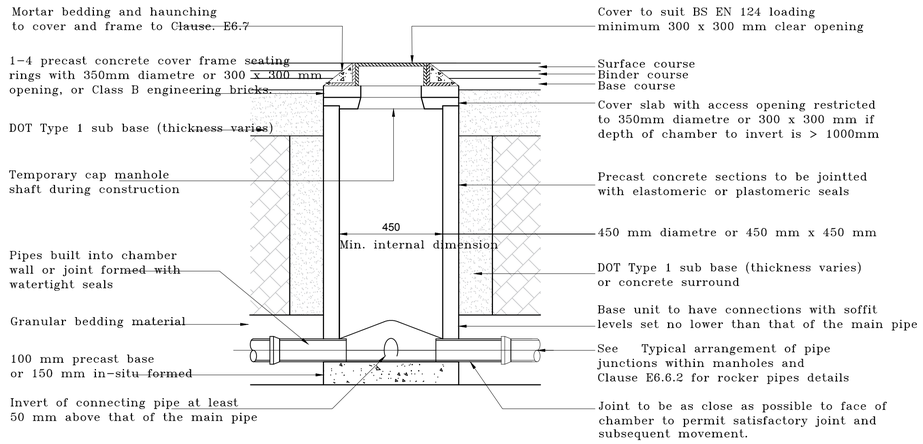

TYPICAL INSPECTION CHAMBER DETAIL–TYPE 3

(MAX DEPTH FROM C.L. TO SOFFIT OF PIPE IN AREAS SUBJECT TO VEHICLE LOADING 3000MM, NON-ENTRY

NOTE: Where the access chamber is in the highway the Highway Authority can have specific requirements

ADOPTABLE DRAINAGE INSPECTION CHAMBERS / MANHOLES

1:25

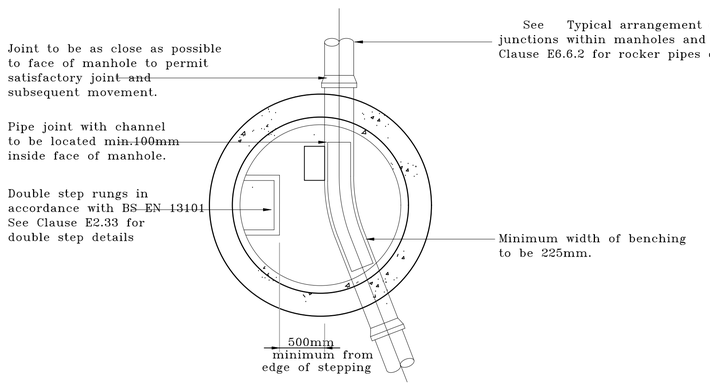

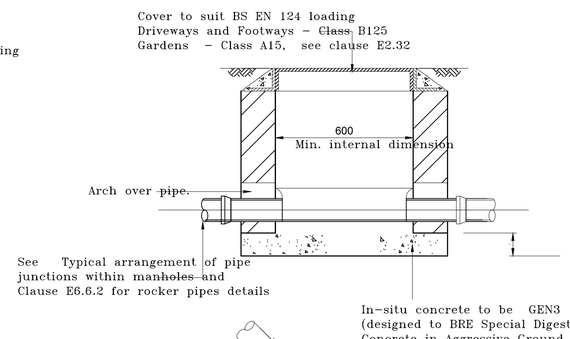

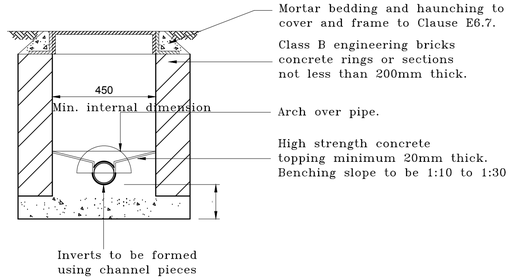

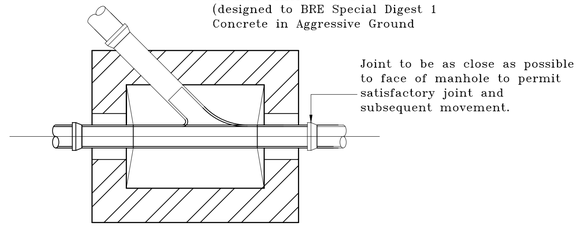

Where chambers are positioned at 90° corners, always use main channel by fitting a 45° bend on the inlet and outlet.

INSPECTION CHAMBER DETAIL – TYPE 4

(MAX DEPTH FROM C.L. TO SOFFIT OF PIPE 1m, no entry)

NOTE:

Internal dimensions of manhole with minimum internal dimensions 450x600mm but manhole width should be increased for pipes larger than 150mm dia. to give 150mm benching each side with the brickwork/masonry units corbelled down to suit cover.

The use of precast rectangular concrete manhole units with 150mm grade GEN3 concrete surround (designed to BRE Special Digest 1 Concrete in Aggressive Ground) is permitted.

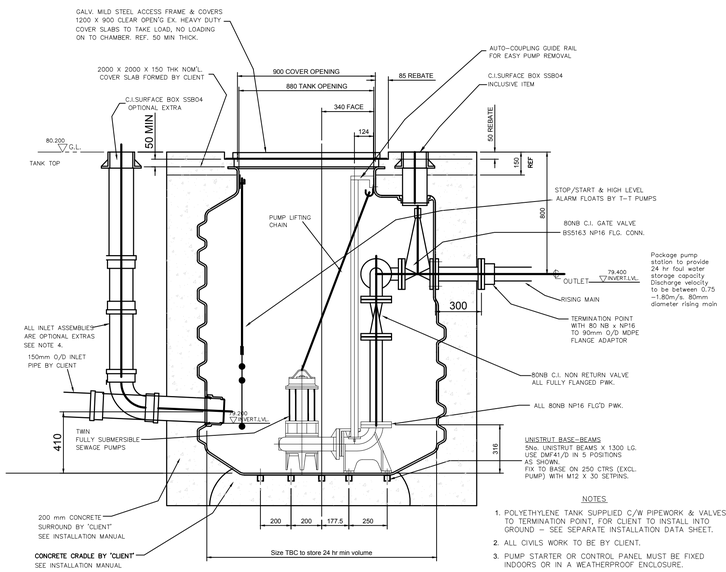

NOTES

1. POLYETHYLENE TANK SUPPLIED C/W PIPEWORK & VALVES TO TERMINATION POINT, FOR CLIENT TO INSTALL INTO GROUND – SEE SEPARATE INSTALLATION DATA SHEET.
2. ALL CIVILS WORK TO BE BY CLIENT.
3. PUMP STARTER OR CONTROL PANEL MUST BE FIXED INDOORS OR IN A WEATHERPROOF ENCLOSURE.
4. A MINIMUM OF 1000mm IS REQUIRED BETWEEN INLET INVERT HT. AND SUMP BASE

SECTION ELEVATION OF PUMP CHAMBER

(THOUGH MAY VARY DEPENDING ON CHOSEN PUMP CHAMBER SUPPLIER)

NOTES

1. This drawing is to be read in conjunction with all relevant Engineers drawings and specifications.

2. All dimensions are in milimetres unless noted otherwise.

3. The Contractor is responsible for the setting out and for checking all dimensions.

4. In accordance with The Construction (Design and Management) Regulations 2015 (CDM 2015) the Principal Designer and Contractor are to:
-Notify HSE of works.
-Comply with the requirements of Health and Safety Plan (if applicable)
-Provide risk assessments and method statements for all potential hazards relevant to this project.

Date	By	Revision	QA'D	Chk'd	Ref

Status: PRELIMINARY

Cowan Consultancy
STRUCTURAL, CIVIL AND BUILDING CONSULTANTS
3 Turnberry House
4400 Parkway
Whiteley
Fareham
Hampshire
PO15 7FJ

Also at:
Landguard Manor
Landguard Manor Road
Shanklin
Isle of Wight
PO37 7JB

Tel: 01489 577488
Fax: 01489 579873
consultants@cowanconsult.co.uk
www.cowanconsult.co.uk

Client: IMPERIAL HOMES

Project: SPRINGFIELDS ALDINGBOURNE

Title: DRAINAGE DETAILS 2 OF 2

Date	Scale	Drg. No.
MAY 2021	AS SHOWN @ A1	435050–204D
Drawn: TB	Chk'd: EG	QA'D

DO NOT SCALE THIS DRAWING