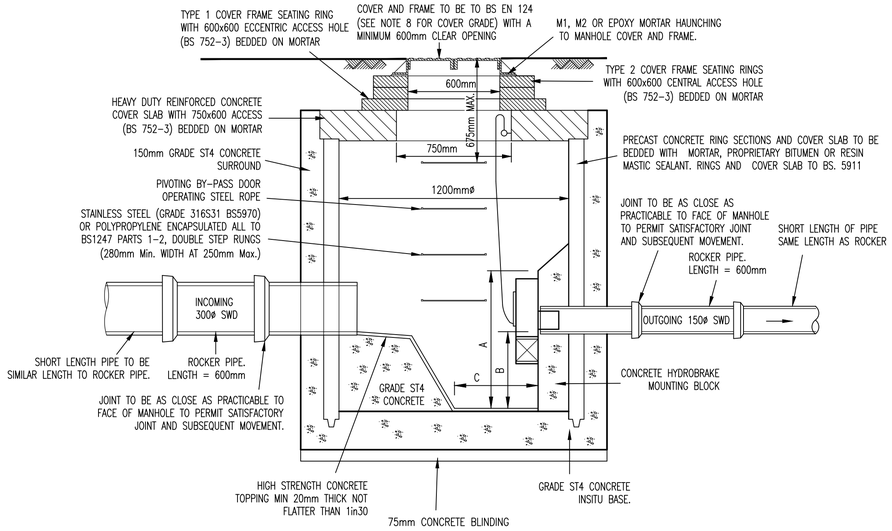

HYDRO-BRAKE DETAILS			
TYPE	TBC		
SIZE	TBC		
OUTLET	150ø		
FLOW RESTRICTION	1.0 L/Sec.		
DIM	A	B	C
mm	TBC	450	450

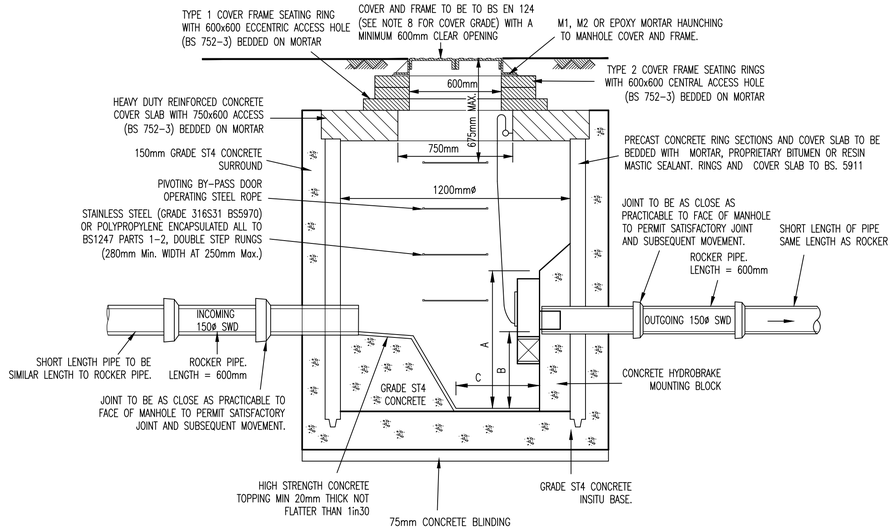

HYDRO-BRAKE DETAILS			
TYPE	TBC		
SIZE	TBC		
OUTLET	150ø		
FLOW RESTRICTION	1.0 L/Sec.		
DIM	A	B	C
mm	TBC	450	450

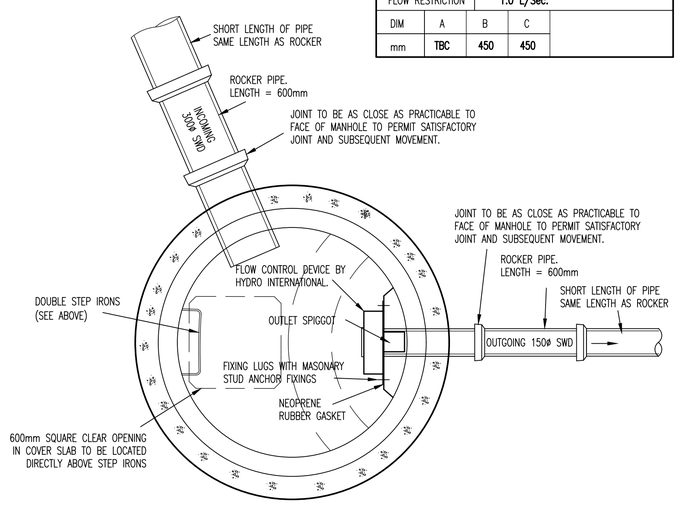

1.0L/Sec (Outfall 1) Flow Control Manhole Detail

SCALE 1:20

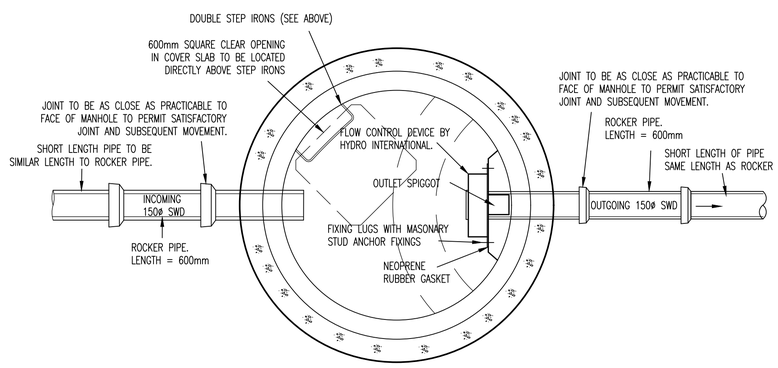

1.0L/Sec (Outfall 2) Flow Control Manhole Detail

SCALE 1:20

NOTES

1. THIS DRAWING SHALL BE READ IN CONJUNCTION WITH ALL RELEVANT ENGINEERS DRAWINGS. ANY DISCREPANCIES FOUND BETWEEN INFORMATION SHOWN ON THIS OR ANY OTHER DRAWING SHALL BE REPORTED TO THE ENGINEER IMMEDIATELY AND PRIOR TO WORKS COMMENCING ON SITE.

2. ALL CONCRETE AT OR BELOW GROUND LEVEL ON SITE SHALL BE ABLE TO WITHSTAND SULPHATE CONCENTRATIONS IN ACCORDANCE WITH BRE SPECIAL DIGEST 1.

3. DOMESTIC DRAINAGE SHALL BE OSMA 'OSMADRAIN', HEPWORTH OR OF SIMILAR APPROVED TYPE, BEDDED STRICTLY IN ACCORDANCE WITH THE MANUFACTURERS INSTRUCTIONS.

4. WHERE CONCRETE BED AND SURROUND IS SPECIFIED JOINT FILLER SHOULD BE PROVIDED AT EVERY JOINT. THE FILLER MAY BE EXPANDED POLYSTYRENE 25mm THICK OR FLEXCELL CUT TO THE SHAPE OF THE BED AND SURROUNDED AND SUCH THAT THE INGRESS OF CONCRETE INTO THE PIPE IS PREVENTED.

5. TO ALLOW FOR POSSIBLE DIFFERENTIAL MOVEMENT A FLEXIBLE JOINT MUST BE INCORPORATED IN EACH SECTION OF PIPELINE WITHIN 150mm OF WHERE IT ENTERS A BUILDING OR CONNECTS WITH A MANHOLE, WALL OR OTHER STRUCTURE:- SEE MANUFACTURERS INSTRUCTIONS.

6. ALL PIPEWORK GENERALLY TO BE BEDDED AS FOLLOWS UNLESS SHOWN DIFFERENTLY ON CARRIAGEWAY LONGITUDINAL SECTIONS

(i) UNDER VEHICULAR AREAS WHERE COVER IS LESS THAN 900mm UNDER PEDESTRIAN AREAS WHERE COVER IS LESS THAN 600mm. ALL GULLY CONNECTIONS. } CONCRETE BED AND SURROUND.

(ii) UNDER VEHICULAR AREAS, PEDESTRIAN AREAS WHERE DEPTHS GIVEN IN (i) ARE EXCEEDED; } CLASS S BEDDING.

7. MANHOLE COVERS SHALL BE INSTALLED PARALLEL TO KERB LINES.

8. MANHOLE COVERS SHALL BE TO BS EN 124 AS FOLLOWS : -
ROADS - CLASS D400
PARKING AREAS - CLASS C250
LANDSCAPED AREAS - CLASS B125

AutoCAD.DWG VERSIONS OF THIS DRAWING NEED TO BE PRINTED USING THE SDP-STANDARD CTB FILE FOR CLARITY.

REV	DATE	DESCRIPTION	BY	CHK
P1	APR 22	PLANNING CONDITION SUBMISSION	RT	

STATUS

PLANNING

This drawing is the property and copyright of the Consulting Engineer and shall not without written consent be communicated to a third party. ©

CLIENT

OAKFORD HOMES

SITE

FORD ROAD, ARUNDEL

TITLE

Domestic Drainage Construction Details Sheet 3 of 4

SDP CONSULTING ENGINEERS

Head Office, Suite 3, Salar House, Campfield Road, St.Albans, Hertfordshire. AL1 5HT
Tel. 01727 844606. Fax. 01727 830771
Email. mail@sdpce.co.uk

Southern Office, 21a Bargates, Christchurch, Dorset. BH23 1QD.
Tel. 01727 844606. Fax. 01202 490601
Email. sdpsouth@sdpce.co.uk

SCALE	DRAWN	DATE
See Drg @ A1	AJV	APR 22
	CHECKED –	PASSED –
DRAWING NO.	SDP DRAWING NO.	REV.
OAK097_1014	E19-003-1014	P1

ARUN DISTRICT COUNCIL ABS/TQD/DOC