ARUN DISTRICT COUNCIL AB/55/22/DOC

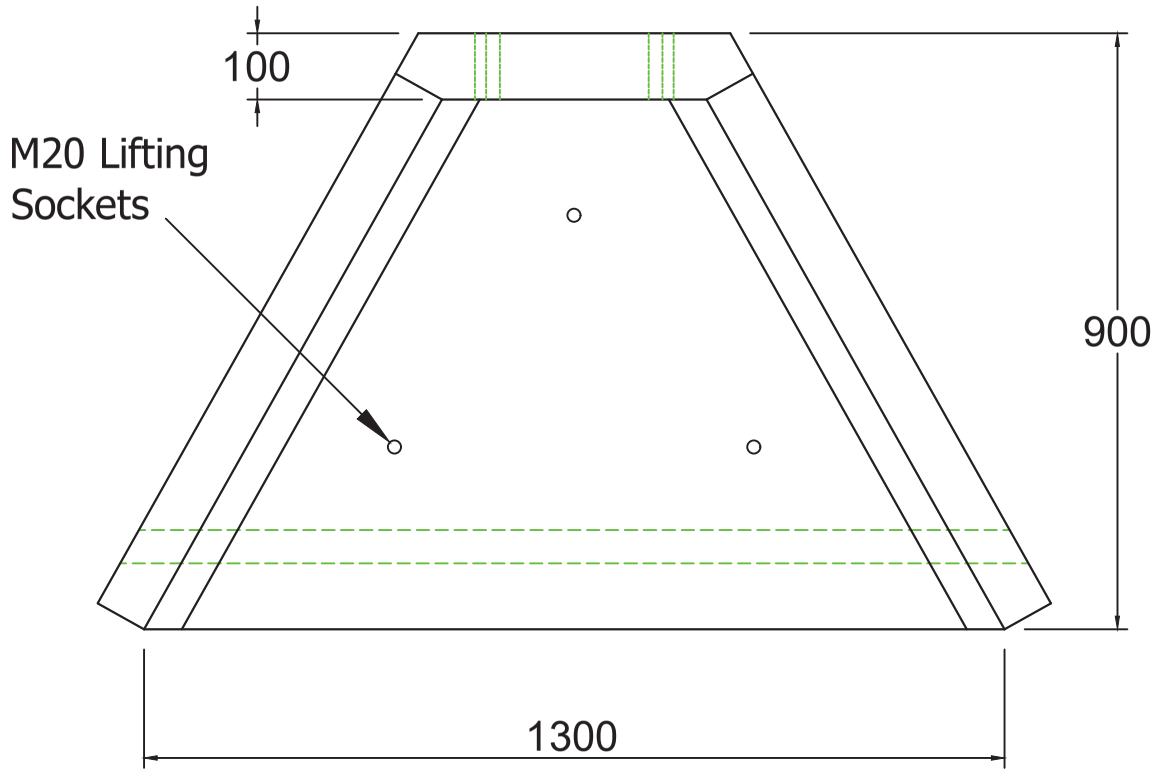

Note: Isometric drawing is for reference only, details may not accurately represent actual design - please see detailed views for technical information

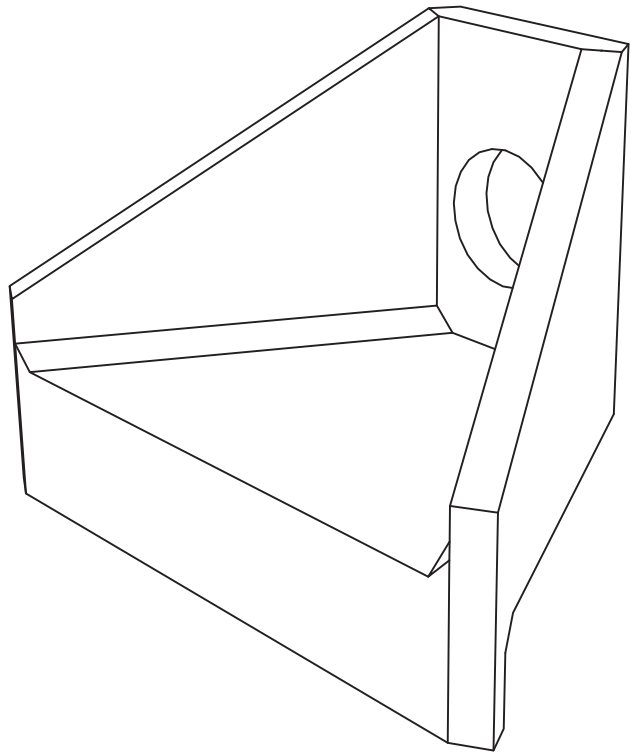

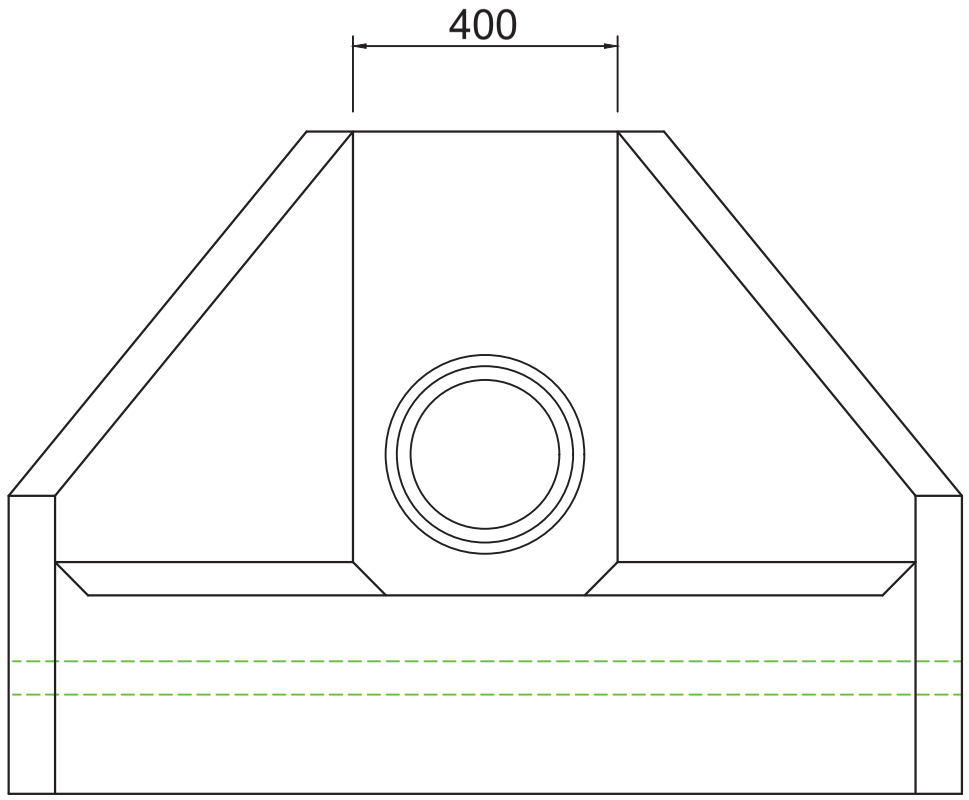

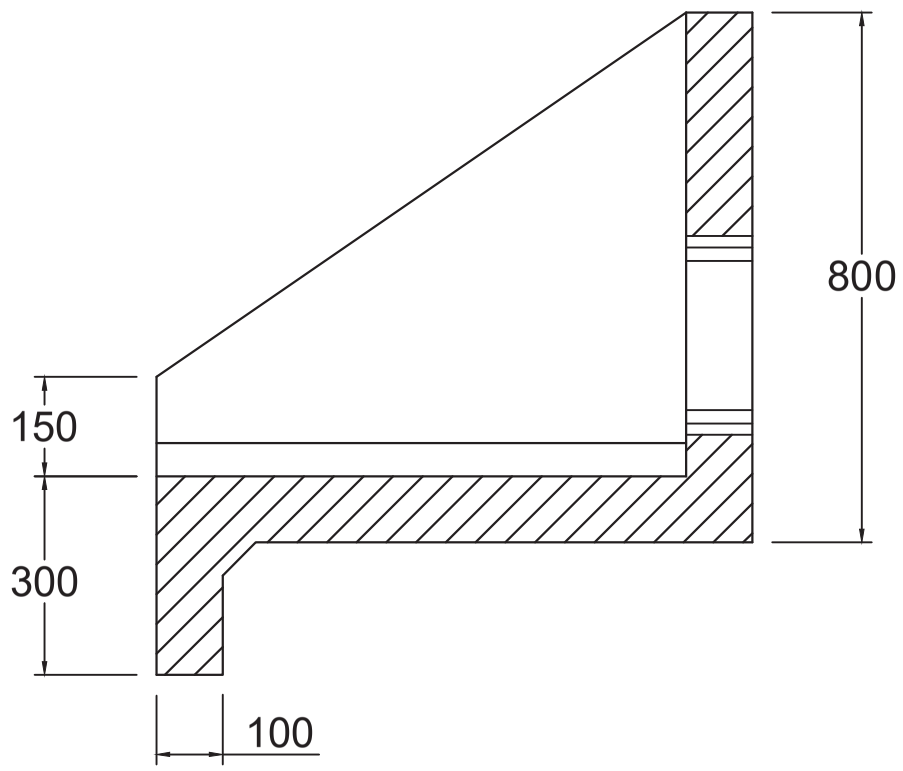

DO NOT SCALE DRAWING

NOTES:

- All dimensions in mm
- All measurements ± 1mm

Specification Information

- Opening in back wall cast to suit outside diameter of the pipework
- Invert level of pipe can be set to your specification

Headwall Installation

Units should be bedded on minimum 150mm of semi-dry concrete.
Sit the headwall level or with a slight fall 1:50 from pipe to spill mouth.

Handling

A. Weight of concrete is based on 2.4 tonne/m³+5% is recommended for sizing lifting equipment.
B. All lifting points shall be used as specified below - Anchor points & loops - Total Qty: 3
C. Unit to be lifted as per lifting diagram

Concrete

A. Mix ref: Self-compacting DC4/DS4 Mix
B. Lifting strength based on 2 cubes = 20N/mm²
C. Characteristic 28 day cube strength = 50N/mm²
D. Concrete provides Design Chemical Class 4 (DC4) to special Digest 1, Table F2.

Reinforcement

A. Reinforcement to BS EN 13369
B. Scheduling, dimensioning, bending & cutting to BS8666
C. Cage to be machine tied with steel wire

Manufacture

A. Manufacture to BS EN 15258:2008 precast concrete products - Retaining wall elements, Factory Production Control certificate number: 0086-CPR-650448 & BS EN 13369
B. Tolerances to BS EN 13369 clause 4.3.1.1
C. Finishing:

	Top	Sides	Base	Rear of back wall
Class	A	A	A	Self - Levelled

D. Marking: Units shall be indelibly marked to show:

- Mould reference code
- De-mould date
- Job reference number & unique product number
- Unit weight (kg)

Design

A. Concrete design to EC2
B. Althon have designed the concrete units only, the site conditions should be assessed for suitability by the scheme designer
C. Units are designed to withstand a vertical live load surcharge of 10kN/M²
D. Weight of soil = 18kN/M²
E. Angle of internal friction = 30 Deg.
F. Design Life: >50 years

Min Cover	Cover Block Size (mm)	Min Cover Size (mm)	Max Cover Size (mm)
All Faces	33	28	38

Exposure Classification	Exposure induced by Carbonation	Corrosion induced by Chloride	Freeze/thaw attack	Chemical attack
All Faces	XC3/4	XD2	XF3	XA2

Fabrication Specification

A. Manufacture IAW EN 1090-2 EXC CLASS 1
B. Material grade is to be: BS EN 10025 S275
C. Welding carried out IAW EN 1090-2 PARA 7.5.4 - 7.5.18
D. All fillet and butt welds to have a minimum throat thickness of 6mm & joints to be fully welded where possible.
E. Ensure vertical flats are fully welded both sides where possible.
F. All sharp edges and burrs are to be removed.
G. Remove all weld splatter.
H. Holes by punching are permitted with reaming.
I. Galvanising is carried out after fabrication to BS EN:ISO 1461

Handrail Specification

A. Kee Klamp® Galvanised Size 8 Fittings
B. Size 8 48.3mm OD 3.2mm Wall Thickness Galvanised Medium Duty Tube to BS EN 10255
C. 360N/m Design Load at stated in BS 8118, BS 6180, BS 6399 & BS 7818, Civil Engineering Specification for thw Water Industry (CESWI) 7th Edition Clause 2.60 Handrails & Balusters & The Engineering Equipment and Materials Users' Association (EEMUA) Publication 105 7th Edition Factory Stairways, Ladders and Handrails
D. Other design loads available on request
E. GRP/FRP Handrails also available

REV NO	DATE	DESCRIPTION

Althon

ADDRESS: ALTHON LIMITED
VULCAN ROAD SOUTH
NORWICH
NR6 6AF

TEL: 01603 488700
FAX: 01603 488598
EMAIL: sales@althon.co.uk
WEBSITE: www.althon.co.uk

PROPRIETARY & CONFIDENTIAL

The information contained in this drawing is the sole property of Althon Limited. Any reproduction in part or as a whole without the written permission of Althon Limted is strictly prohibited.

DRAWING TITLE / PROJECT:

H3C Headwall

CLIENT:

SCALE:	PAPER:	SHEET NO:	DATE:
NTS	A3	01 OF 02	23 - 04 - 18

HEADWALL WEIGHT:	TOE WEIGHT:
540kg	N/A

PRODUCT NAME: H3C

DRAWING No: