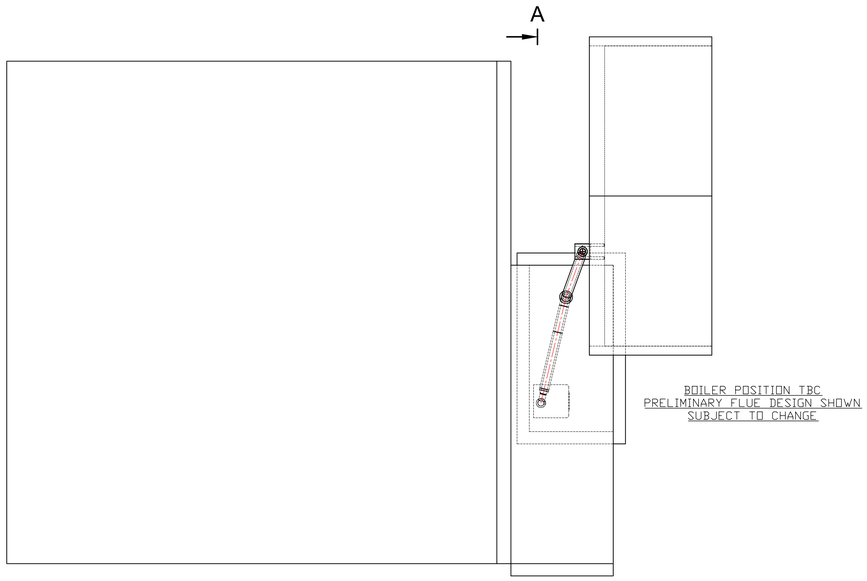

PLAN VIEW
SCALE 1:50

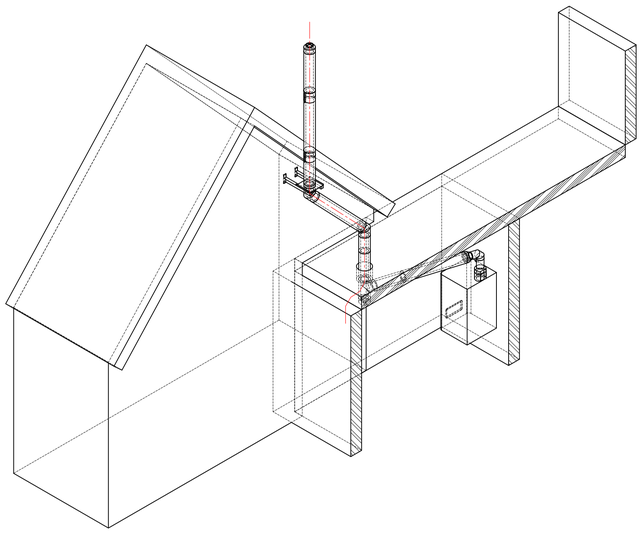

ISOMETRIC VIEW
NOT-TO-SCALE

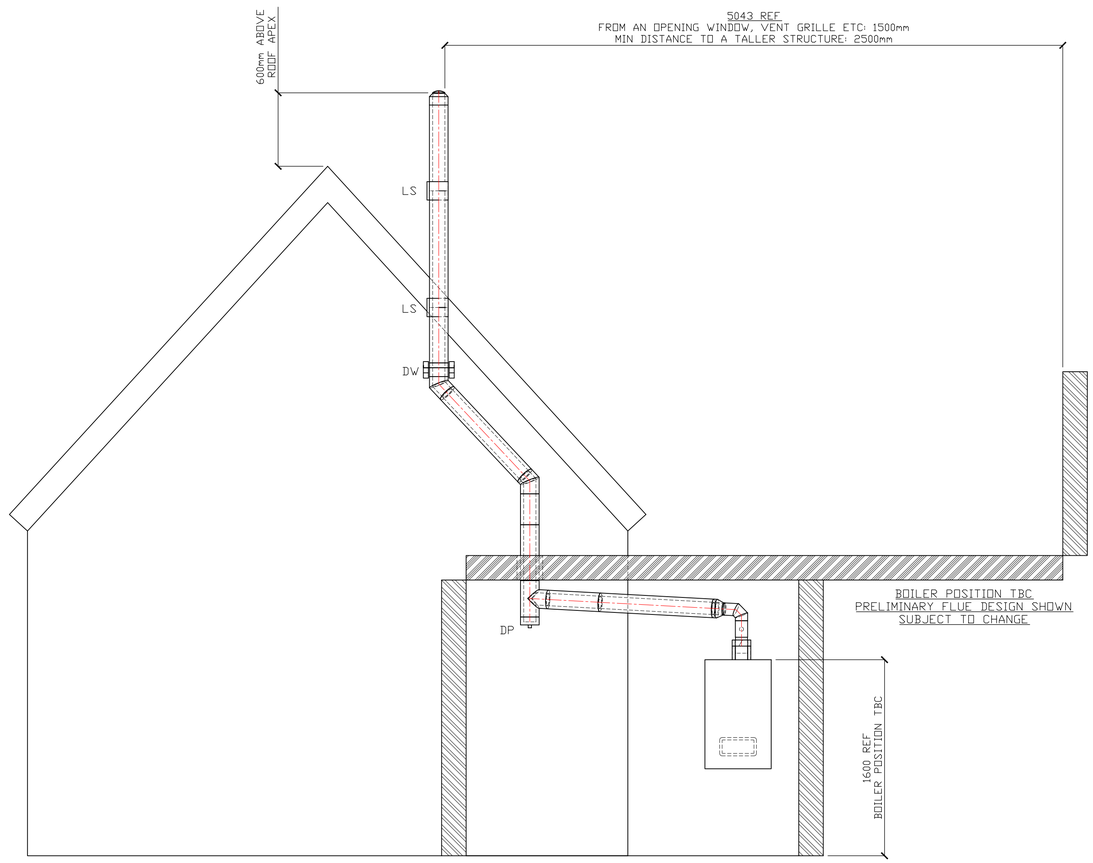

ELEVATION VIEW
SECTION A-A
SCALE 1:25

General Notes

© This drawing and the works shown are the copyright of Midtherm Engineering Ltd and may not be reproduced except by written permission.

This drawing is to be read in conjunction with any other Midtherm Engineering Ltd Drawings.

Do not scale off this drawing, use figured dimensions only, if in any doubt, ask!

KEY

DP - DRAIN POINT (PIPEWORK BY OTHERS)
D/S - DRAUGHT STABILISER
DW - DEADWEIGHT SUPPORT
LS - LATERAL SUPPORT
NRD - NON-RETURN DAMPER
SBD - SINGLE BLADE DAMPER
VCD - VOLUME CONTROL DAMPER

Rev	Description	Date
B	Boiler Position Amended	9.5.22
A	Termination Height Text Amended	4.5.22

Client/Site Location
Arundel Royal Mail

Title
GENERAL ARRANGEMENT DRAWING

MIDTHERM Engineering Limited
Midtherm Engineering Ltd, Staffordshire House, New Road, Netherton, Dudley, West Midlands DY2 8TA
Tel: 01384 455811 Email: sales@mideng.net Web:www.mideng.net

Drawn	Checked	Scale	Date
HW		AS VIEWS	29-03-22

Drawing No. 6782-GA-01
Rev B
Sheet Size A0

ARUN DISTRICT COUNCIL AB/5202/PL